NWS-3410/3460

SERVICE MANUAL

J Model

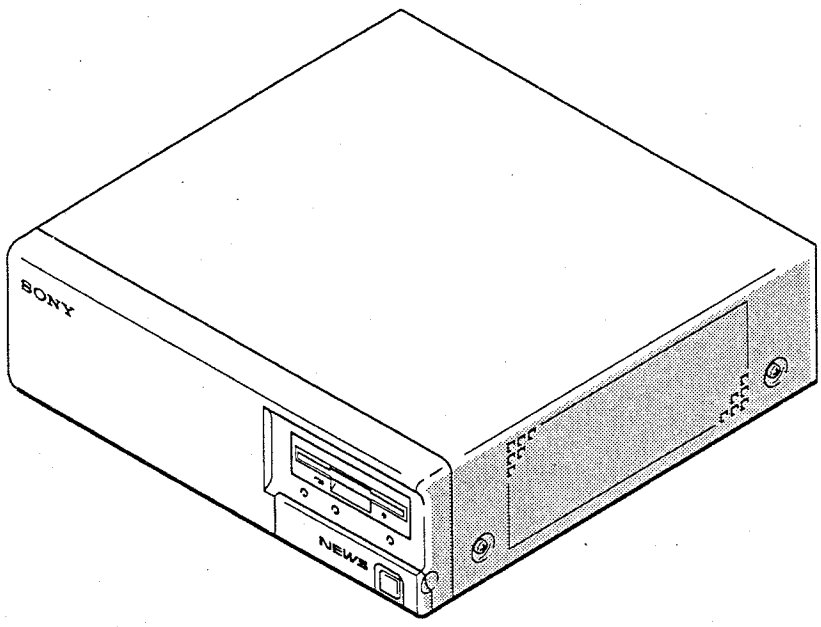

NEWS

NET WORK STATION

SONY®

CHAPTER 1
OPERATIONS

1-1. OPERATING INSTRUCTIONS

System Overview

Superb architecture with high-performance 32-bit processor

The NWS-3400 series NET WORK STATION boasts a superb architecture employing a high-performance R3000 family RISC[1]-type 32-bit microprocessor as CPU. This new architecture has maximized processing capacity and increased the processing speed to three times that of the NWS-1800 series.

UNIX[2] workstation features

The NWS-3400 main processor consists of the R3000 and R3010 floating point co-processor (both with 20MHz clock frequency) as CPU, a 64-Kbyte cache memory (instruction and data), a 4-stage write buffer, and an 8-Mbyte main memory (expandable up to 16 Mbytes). It also incorporates a large capacity (415-Mbyte) hard disk drive and a 3.5-inch floppydisk drive. In keeping with the NEWS series design concept, it is equipped with an Ethernet[3] controller, two RS-232C serial ports, a parallel port for printer connection, a keyboard/mouse interface, and a SCSI bus for external storage devices.

Note that the NWS-3410 diskless machine will not contain a hard disk drive.

By connecting an optional terminal and Ethernet transceiver, you can easily configure a high-peformance UNIX workstation.
For better user-interface, you can connect one of the optional bitmap displays together with a separately sold keyboard/mouse.

1) RISC is an abbreviaton of "Reduced Instruction Set Computer."
2) UNIX is a registered trademark of AT&T in the U.S.A. and other countries.
3) Ethernet is a trademark of Xerox Corporation.

Setting up the NEWS System

The NEWS system can be used for a variety of applications when combined selectively with one or more of the peripheral devices available. The following are examples of system configuration.

Standard System

This is the minimum system for using the NWS-3400 Series on the network.

It is necessary at server machine to HDD of attached outside, or on network for diskless machine.

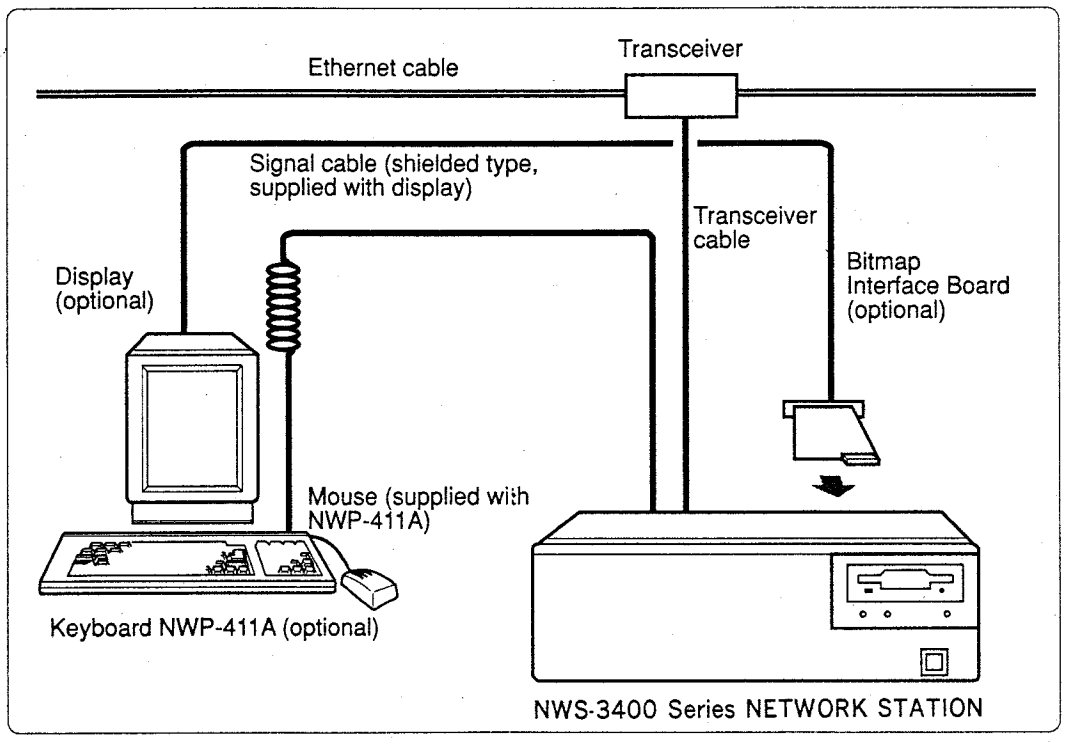

Use the optional NWA-021/022 Ethernet Construction Kit for network connection. (The kit includes Ethernet cables, a transceiver and transceiver cable.)
When using the workstation as a standalone system, these are not required.
For details on which display and bitmap interface board to use, see page 6.

Expanded System with Peripheral Disk Units

Apart from the built-in hard disk unit, you can connect up to 6 peripheral units (hard disk unit, MO disk unit, up to 4 streaming tape units, etc.)

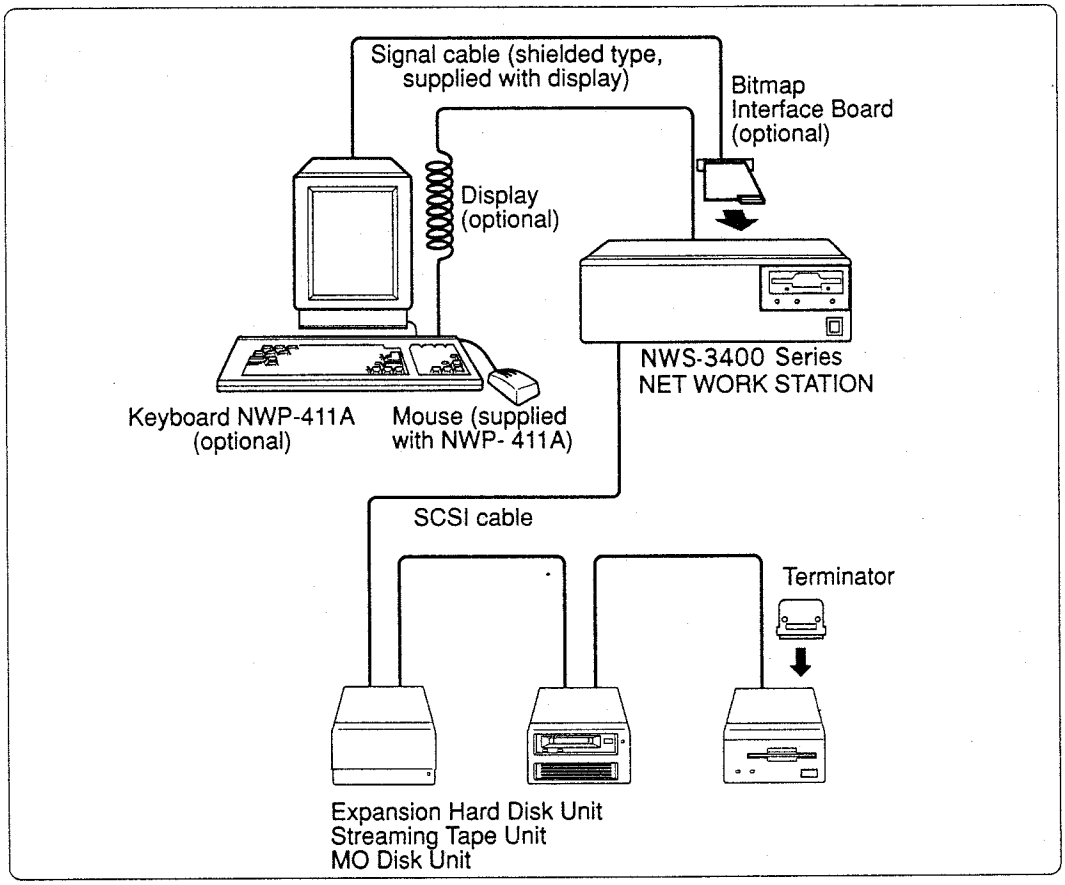

For details on which display and bitmap interface board to use, see next page.

Peripheral Devices

For a list of optional peripheral devices, contact your Sony dealer.

Among the NEWS system peripheral devices, the following boards can be used for the NWS-3400 series NET WORK STATION:

- NWB-231A 4ch Serial Interface Board
- NWB-240A/241A Laser Beam Printer/Image Reader Interface Board
- NWB-235A Expansion Network Board
- NWB-251 Color Bitmap Interface Board
- NWB-514 Grayscale Bitmap Interface Board

The following boards can also be installed in the expansion I/O slot, but cannot be installed at the same time as other bitmap boards:

- NWB-252 Color Bitmap Interface Board
- NWB-253 Monochrome Bitmap Interface Board

Use one of the following displays according to the bitmap interface board:

Bitmap interface board	Display
NWB-251	NWP-513/516 Color Bitmap Display
NWB-514	NWP-514 Monochrome Bitmap Display
NWB-253	NWP-512D/518 Monochrome Bitmap Display
NWB-252	NWP-515 Color Bitmap Display

Precautions

Safety

- The unit operates on 100V AC, 50/60 Hz.
- Should any solid object or liquid fall into the cabinet, keyboard or mouse, unplug the unit and have it checked by qualified personnel before operating any further.
- Unplug the unit from the wall outlet if it is not to be used for an extended period of time.
- To disconnect the cord, pull it out by the plug. Never pull the cord itself.
- Do not share the AC outlet with any other power-consuming equipment such as copying machines or shredders.
- Connect all power cables of the unit and its peripheral equipment to the same AC supply line. AC derived from different supply lines may result in voltage differences which can cause unstable operation or unwanted weak currents at the time of connection.

Installation

- The NET WORK STATION, keyboard and mouse consist of high-precision electronic parts. Do not drop or bump them against other objects. Do not place them in locations subject to vibration or on an unstable base.
- Do not install the unit near heat sources such as radiators or air ducts, or in a place subject to direct sunlight, excessive dust and/or moisture.
- Do not place electronic equipment near the computer. The computer's electromagnetic field may cause them to malfunction.
- The computer uses high frequency radio signals and may cause interference to radio or TV reception. Should this occur, relocate the computer a suitable distance away from the set.
- Provide adequate air circulation to prevent internal heat build-up. Do not place the unit on loose surfaces (rugs, blankets) or near materials (curtains, draperies) that may block its ventilation slots.
- Use only specified peripheral equipment or interface cables; otherwise, problems may result.
- When moving the unit, insert the supplied yellow protection sheet to the floppydisk drive.
- Do not place anything on the opened front cover. The front cover cannot sustain extra loads.
- Do not place any heavy object on the unit. A load of 20 kg or heavier may cause the workstation to malfunction.

Cleaning

Clean the cabinet with a soft, dry cloth, or a soft cloth lightly moistened with a mild detergent solution. Do not use any type of solvent, such as alcohol or benzine, as this may damage the finish.

Condensation

If the workstation is brought directly from a cold to a warm location, condensation may collect inside the workstation. In this case, wait at least an hour to power on the workstation. While condensed moisture is still present, inserting a floppydisk may damage the floppydisk drive or the floppydisk. Remove the floppydisk immediately when there is any sign of moisture.

Using an external floppydisk drive

When using an external floppydisk drive, do the following:

1. Connect the interface cable.
2. Power on the workstation.
3. Power on the external floppydisk drive.

It does not matter if you power on the drive before booting the operating system.

Location and Function of Parts and Controls

Front

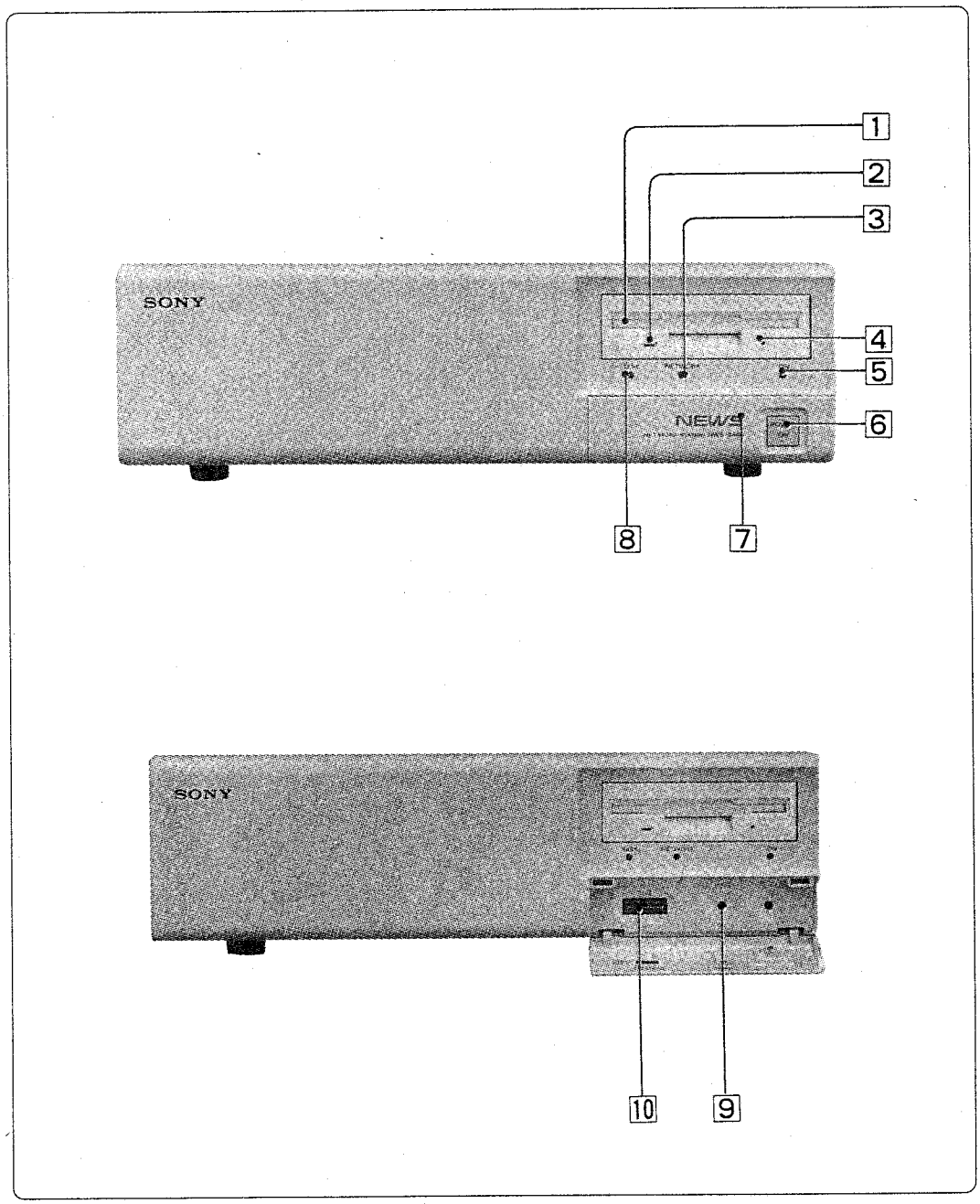

[1] **3.5-inch floppydisk drive**
Floppydisks are inserted into this slot.

[2] **Floppydisk IN-USE indicator**
Lights up when data on the inserted floppydisk is accessed. **Do not eject the floppydisk while this indicator is lit. Data stored on the floppydisk may be destroyed.**

[3] **NETWORK indicator**
Lights up orange when the Ethernet controller receives or transmits a packet.

[4] **Floppydisk eject hole**
When the floppydisk cannot be ejected using ROM monitor or operating system commands, eject the floppydisk by inserting the supplied eject tool straight into this hole.

[5] **POWER indicator**
Lights up green to indicate the power to the unit is on.

[6] **POWER switch**
Press this switch to turn on the unit. Keep it depressed for more than two seconds until the POWER indicator lights up.
You cannot turn the power off with this switch. To turn the power off, use the appropriate ROM monitor or operating system command.

Note
Allow about 10 seconds after connecting the unit to an AC outlet (AC 100V) before turning on the power. If the POWER switch is pressed immediately after connection, it may not turn on the power.

[7] **Front cover**
Open this front cover when operating the POWER OFF/RESET switch [9] or the DIP switches [10] during initial setting, or using the floppydisk drive.

[8] **DISK indicator (Hard disk built-in model)**
Lights up red when the processor is accessing the built-in hard disk or the external storage device connected to the SCSI bus connector [17] .

[9] **POWER OFF/RESET switch**
Used to forcibly turn off the power to the unit. In normal use software commands should be used to turn off the power to the unit.
To reset the CPU, push this switch while holding down the POWER switch [6] . After releasing this switch, keep the POWER switch depressed (for about two seconds) until the POWER indicator lights up again.

[10] **DIP switches**
Set these switches to designate the type of the connected display and the starting program at power on. Refer to page 1-11 for setting instructions.

Rear

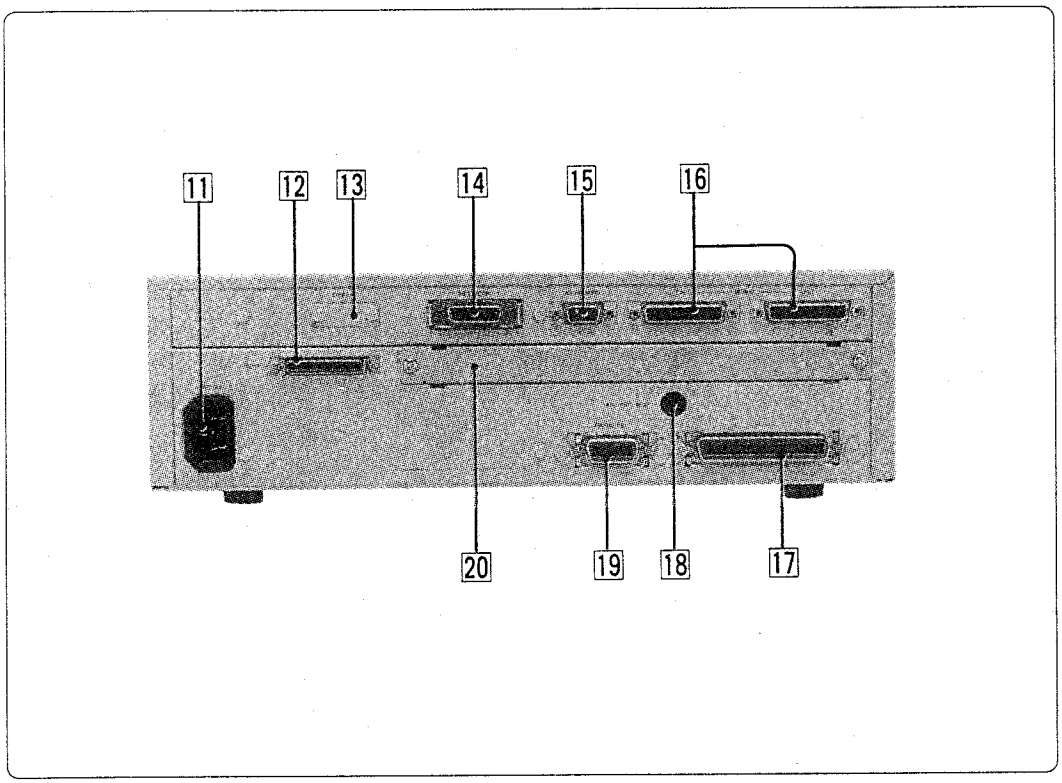

11 **AC inlet**
Connect to an AC outlet (AC 100V) with the supplied power cord.

12 **FDD connector**
Connect an external floppydisk drive. The NEC PC9831-MF2 (5 inches) or PC9831-VW2 (3.5 inches) are recommended. Use the optional NWA-024 connection cable for connection.

13 **DISPLAY internal slot**
Insert the optional NWB-253 Monochrome Bitmap Interface Board or NWB-252 Color Bitmap Interface Board into this slot.

14 **NETWORK connector**
Connect an optional Ethernet transceiver.
For details, see the NWA-021 Network Starter Kit or NWA-022 Tranceiver Operating Instructions.

15 **KEYBOARD connector**
Connect the optional NWP-411A Keyboard. Signals from the mouse are also input to this connector through the keyboard.

16 **SERIAL port connectors**
Connect a computer terminal, modem or printer equipped with an RS-232C interface. There are two channels: CH0 and CH1.

17 **SCSI bus connector**
Connect an external storage device for expansion.
Be sure to attach the supplied terminator when no expansion unit is connected.

18 **MIC/SP Box connector**
Connect the supplied microphone/speaker box.

19 **PARALLEL port connector**
Connect a printer equipped with a Centronics interface.

20 **Expansion I/O slot**
Insert optional boards, such as a Bitmap Interface Board or Laser Beam Printer/Image Board, into this slot.

DIP Switch Setting

This section explains the setting of the DIP switches located at the front of the unit (open the front cover to access). Be sure to set them properly before operating the unit.

<table>
<tr><td>Switch 1–3</td><td>Console setting bits
<table>
<tr><th colspan="3">Switch</th><th rowspan="2">Function</th></tr>
<tr><th>1</th><th>2</th><th>3</th></tr>
<tr><td>OFF</td><td>OFF</td><td>OFF</td><td>Console is an ANSI standard terminal (9600 bps, 8 bits, no parity, 1 stop bit).</td></tr>
<tr><td>OFF</td><td>ON</td><td>OFF</td><td>When using a bitmap interface board specially designed for the NWS-3400 series. (NWB-252, NWB-253)</td></tr>
<tr><td>ON</td><td>ON</td><td>ON</td><td>Console is a monochrome bitmap display (Using NWB-514 and NWP-514)
Console is a color bitmap display (Using NWB-251 and NWP-513/516)</td></tr>
</table></td></tr>
<tr><td>Switch 4</td><td>Selects the OS booting device during autoboot.
ON: Remotedisk
OFF: Hard disk</td></tr>
<tr><td>Switch 5</td><td>Sets the starting program at power on.
ON: Autoboot
OFF: ROM Monitor</td></tr>
<tr><td>Switches 6 , 7 and 8</td><td>Must be set to OFF.
(The unit does not operate when these switches are set to ON.)</td></tr>
</table>

Floppydisk Drive Operating Procedures

Overview

The NWS-3400 series has a built-in 3.5-inch floppydisk drive as a secondary storage device. Two kinds of floppydisk can be used:

Type	Recording capacity
2HD-type 3.5-inch micro floppydisk	2M bytes (unformatted)
2DD-type 3.5-inch micro floppydisk	1M byte (unformatted)

Operating Procedure

1 Insert a floppydisk.
Insert the floppydisk as shown in the illustration. Push in the floppydisk until a distinct click is heard. The drive then automatically accepts the floppydisk.

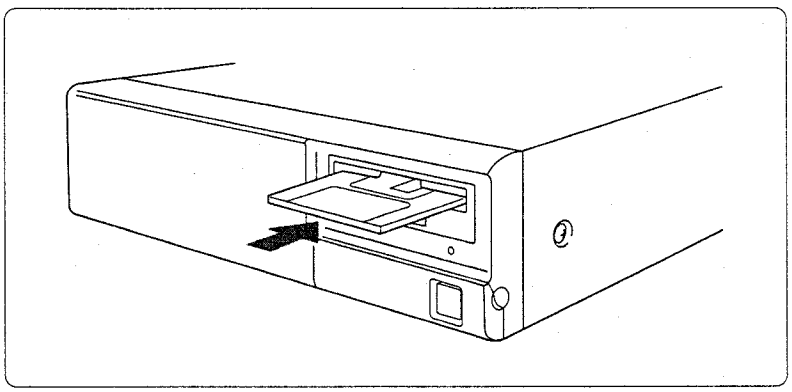

2 Use the workstation's operating system commands to read/write data from/to the floppydisk. The floppydisk IN-USE indicator lights up when reading/writing data.

Ejecting the Floppydisk

The floppydisk can be ejected using the appropriate operating system or ROM monitor command. For details, refer to your software manual.

Emergency ejection of the floppydisk

Forcibly eject the disk only:

- When the disk drive is not functioning properly and the floppydisk cannot be ejected using the software command.
- When a problem occurs in the workstation, making it impossible to eject the floppydisk using the software command.
- When the power is cut off.

Check once more that the floppydisk IN-USE indicator is not lit, then remove the floppydisk by inserting the supplied eject tool straight into the floppydisk ejection hole as shown in the illustration.

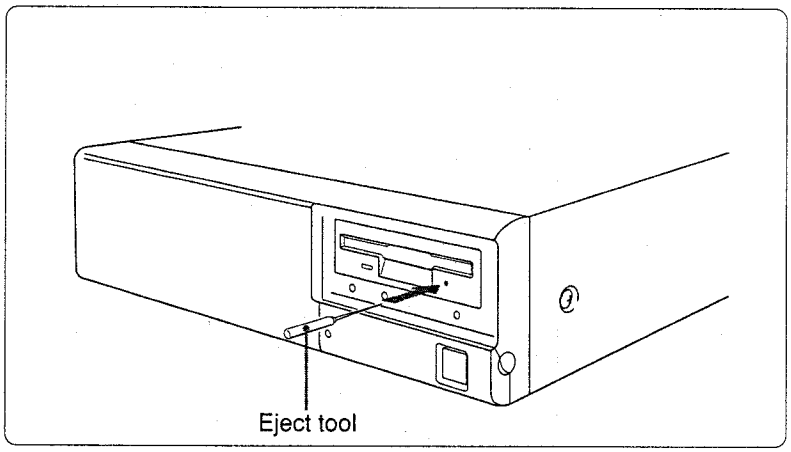

SCSI Bus Connection

Address Setting

The NEWS system employs the SCSI (Small Computer System Interface) bus for connection between the workstation and its peripheral devices such as the NWP-545/546/547. The SCSI bus is an 8-bit parallel interface bus specified by ANSI standard X3.131-1986, allowing connection of up to eight SCSI controllers per system. In the NEWS system, each peripheral device has one SCSI controller. In addition to the workstation itself, the built-in hard disk drive has one controller.

Each controller must have a unique SCSI bus address so as to prevent errors in daisy chain connections. In the NWS-3400 series, the SCSI bus addresses are already set as shown below. Do not allocate these addresses to peripheral devices.

NWS-3400 Series	SCSI address
Built-in hard disk	0
Workstation	7

For details on address setting procedures, refer to the operating manual of each unit to be connected.

Note on SCSI Bus Connection

When no peripheral devices are connected to the SCSI bus connector, be sure to attach the supplied SCSI terminator.

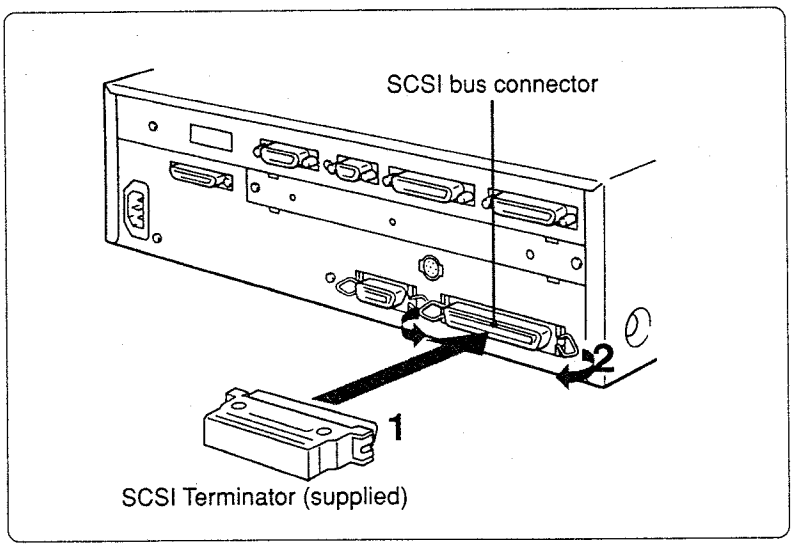

Memory Expansion

The main memory of this unit can be expanded in 4M-byte units up to 16M bytes using the optional NWA-029 4MB Expansion RAM Kit.

Note
NWA-028 4MB Expansion RAM Kit cannot be used for this unit.

Audio Interface Operating Procedures

Overview

The NWS-3400 series workstations are equipped with an audio interface equivalent to the NWA-033 Audio Interface Kit. Using this interface, the workstation can handle the following audio data in stereo and mono:

Coding format	Word Length (bits per sample)	Sampling Frequency (KHz)			
		37.8	18.9	9.45	8
Straight PCM	16	○	○	○	○
Straight PCM	8	○	○	○	○
ADPCM*1	8	◆	–	–	–
ADPCM*1	4	◆	◆	◆	–
μ-law*2	8	○	○	○	○
A-law*2	8	○	○	○	○

○ : recording and playback
◆ : playback only
– : recording/playback unavailable

*1 ADPCM (Adaptive Differential PCM):
Encoding method of compressing and expanding data.
This interface stretches 4-bit and 8-bit data to 16-bit straight PCM data for playback.

*2 μ-law, A-law:
Standard sound encoding method specified by CCITT.

Connect the supplied Microphone/Speaker box to input and output audio signals. Apart from the Microphone/Speaker box's internal microphone and speaker, the MIC, LINE IN and PHONES jacks enable direct input from an external microphone or audio equipment as well as sound output to headphones or speakers with built-in amplifier.

Location and Function of Parts

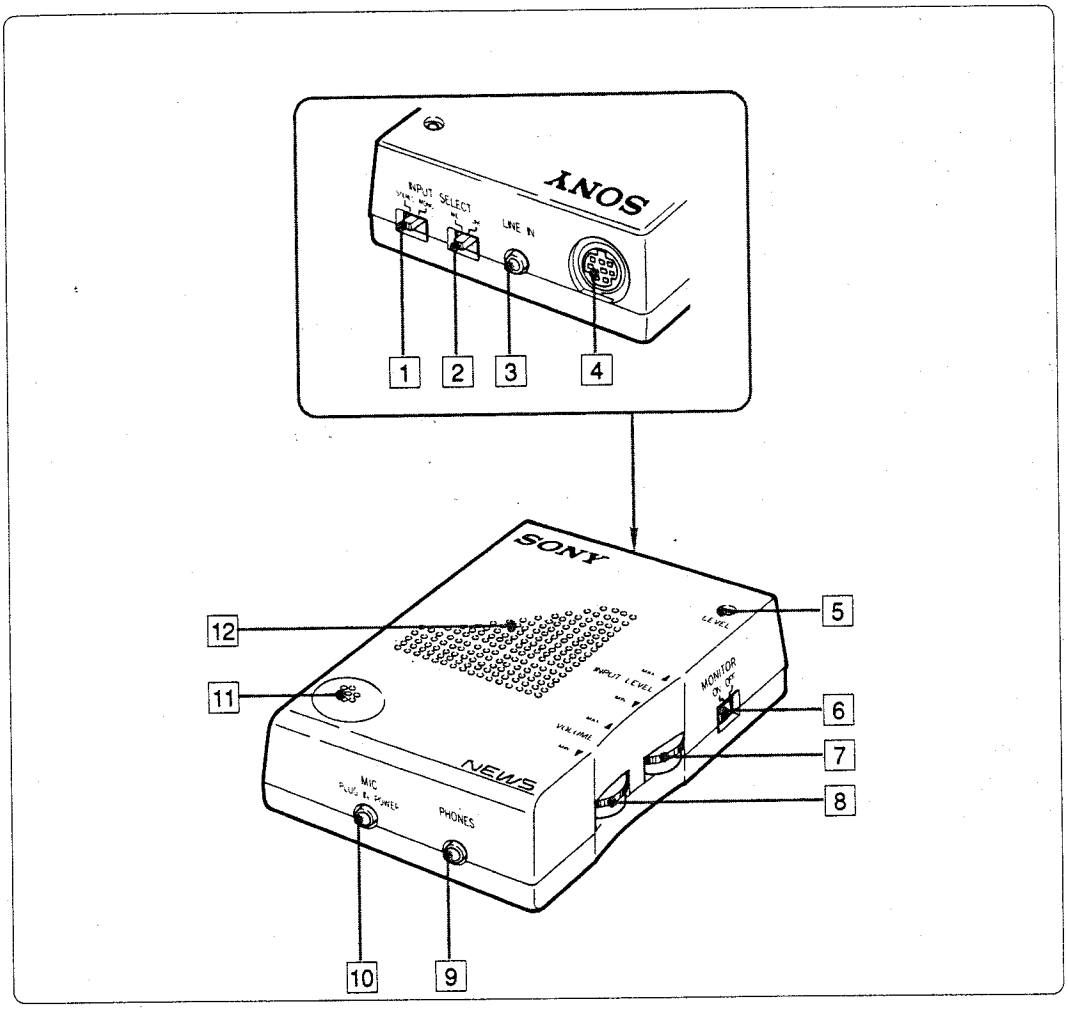

[1] **STEREO/MONO switch**
Switch to STEREO when recording stereo sound and to MONO when recording sound in mono. Select MONO when recording from the internal microphone.
- When STEREO is selected and recording is done in mono, the sound is recorded on the left channel only.
- When MONO is selected and stereo sound is input, the left channel sound is recorded on both channels.

[2] **MIC/LINE switch**
Switch to MIC when recording with the internal or external microphone. Select LINE when recording from audio equipment using the LINE IN jack [3] .

[3] **LINE IN jack** (stereo minijack)
Connect to the audio equipment's line output jack.

[4] **Interface connector** (8-pin)
Connect to the workstation with the supplied connecting cable. (See Page 1-20.)

[5] **LEVEL indicator**
When the sound input level is too high, the indicator lights up.

[6] **MONITOR switch**
Turn this switch to ON to listen with the internal speaker or headphones while recording. The volume can be adjusted with the VOLUME control knob [8] . When using the internal speaker together with the internal microphone, turn the MONITOR switch to OFF in order to prevent howling.

7 **INPUT LEVEL control knob**
Adjust the level so that the LEVEL indicator 5 lights up when high-volume sound is input. If the level indicator remains lit while recording is in progress, turn the knob towards MIN. If it does not light up at all, turn the knob towards MAX.
Perform the above adjustments before recording.

8 **VOLUME control knob**
When playing back sound, adjust the volume with this knob. Monitor volume can also be adjusted. When recording with a microphone, do not raise the volume to too high a level as this may cause howling.

9 **PHONES jack** (stereo minijack)
Connect headphones or speakers with built-in amplifier. The sound from the internal speaker is cut off and can be heard through the headphones or external speakers.

10 **MIC (PLUG IN POWER) jack** (stereo minijack)
Connect the external microphone here. When the external microphone is connected, sound from the internal microphone is cut off. Switch the MIC/LINE switch 2 to MIC.

11 **Internal microphone**
When the MIC/LINE switch 2 is turned to MIC, sound is input from this microphone. When an external microphone is connected, sound from the internal microphone is cut off. When using the internal microphone with the internal speaker, turn the MONITOR switch 6 to OFF to prevent howling.

12 **Internal speaker**
For playing back sound.
When headphones are connected to the PHONES jack 9 , sound from this speaker is cut off.

Specifications

Processor

Main processor	R3000
Clock frequency	20 MHz
Memory access time Instruction and data fetch (at cache hit): Store (with write buffer):	 no wait (1 cycle) no wait (1 cycle)
On-chip MMU	64 entries, full-associative, 4K bytes/page
Floating point accelerator Clock frequency	R3010 20 MHz
DMA	3 channels (SCSI, FDC, AUDIO) 20MHz

Memory

Instruction cache	64 Kbytes, direct mapping
Data cache	64 Kbytes, store-through, direct mapping
Main memory	8 Mbytes (standard), expandable up to 16 Mbytes Burst transfer, byte parity check function
Buffer memory for Ethernet	16 Kbytes
Battery backed-up memory	2040 bytes

Storage Device

Floppydisk drive	3.5-inch 1 or 2-Mbyte type (unformatted)
Hard disk drive (Hard disk built-in model)	5.25-inch 415 Mbytes (formatted)

I/O Interface

SCSI bus	50-pin connector ANSI SCSI standard X3.131-1986
FDD interface	50-pin connector External VFO is usable
PARALLEL port	14-pin connector Centronics 8-bit parallel interface
SERIAL ports (2 ports)	25-pin connector EIA RS-232C interface Maximum baud rate: 9600 bps (when internal clock is used) Asynchronous/synchronous transmission possible External clock usable
NETWORK port	15-pin connector 10M bps Ethernet transceiver interface
Keyboard/mouse interface	9-pin connector TTL level serial transfer
Audio Interface	
A/D converter	
16-bit A/D converter	x1
Sampling frequency	37.8/18.9/9.45/8 KHz
D/A converter	
16-bit D/A converter	x1
Sampling frequency	37.8/18.9/9.45/8 KHz
Expansion slot	Expansion slot for I/O interface board x 1
Display interface slot	Internal slot for bitmap interface board x 1

Microphone/Speaker box

Input	
Internal microphone	Electret condenser mic. (mono) x 1
Microphone input	Stereo minijack (plug-in power) x 1 Minimum input level: 0.3mVrms
Line input	Stereo minijack x 1 Minimum input level: 100mVrms Input impedance: 50KΩ
Output	
Internal speaker	4cm (1 1/2 inch) speaker (mono) x 1
Headphone output	Stereo minijack x 1 Maximum output level: 50mW Load impedance: 32Ω

General

Power requirement	100V ±10% AC, 50/60 Hz
Current drain	3.5A (maximum)
Operating conditions	
Temperature:	10°C to 35°C
Humidity:	30% to 70% (no condensation)
Storage conditions	
Unpacked	
Temperature:	5°C to 50°C
Humidity:	20% to 90% (no condensation)
Packed	
Temperature:	–20°C to 60°C
Humidity:	20% to 90% (no condensation)
Dimensions	
	355 x 110 x 341 mm (w/h/d), excluding projecting parts
Microphone/speaker box:	68 x 25 x 100 mm (w/h/d)
Weight	
	Approx. 9.0 kg (Hard disk built-in model)
Microphone/speaker box:	Approx. 100 g
Supplied accessories	Power cord (1) Terminator (1) Microphone/Speaker box (1) Microphone/Speaker box connecting cable (1) Eject tool (1) Operating Instructions (1) ROM Monitor User's Guide (1)

Pin Assignment

FDD connector
(50P floppydisk interface)

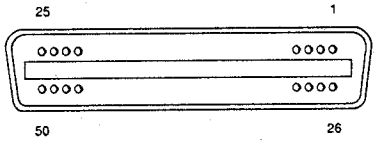

Pin No.	Signal	Pin No.	Signal
1	WINDOW	26	GND
2	MFM	27	GND
3	RDATA	28	GND
4	WPRT	29	GND
5	TRK00	30	GND
6	WGATE	31	GND
7	WDATA	32	GND
8	STEP	33	GND
9	DIR	34	GND
10	DS3	35	GND
11	DS2	36	GND
12	DS1	37	GND
13	DS0	38	GND
14	SYNC	39	GND
15	READY	40	GND
16	INDEX	41	GND
17	HDLD	42	GND
18		43	GND
19	SIDE	44	GND
20		45	GND
21		46	GND
22	MTON	47	GND
23		48	GND
24		49	GND
25		50	GND

SCSI bus connector
(ANSI SCSI standard X3.131-1986)

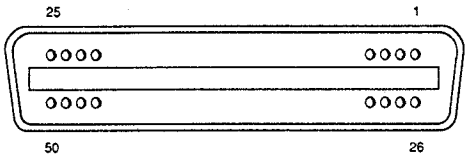

Pin No.	Signal	Pin No.	Signal
1	GND	26	DB0
2	GND	27	DB1
3	GND	28	DB2
4	GND	29	DB3
5	GND	30	DB4
6	GND	31	DB5
7	GND	32	DB6
8	GND	33	DB7
9	GND	34	DBP
10	GND	35	GND
11	GND	36	GND
12	GND	37	GND
13		38	+5V
14	GND	39	GND
15	GND	40	GND
16	GND	41	ATN
17	GND	42	GND
18	GND	43	BSY
19	GND	44	ACK
20	GND	45	RST
21	GND	46	MSG
22	GND	47	SEL
23	GND	48	C/D
24	GND	49	REQ
25	GND	50	I/O

PARALLEL port connector
(Centronics 8-bit parallel interface)

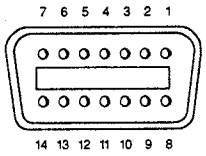

Pin No.	Signal	Pin No.	Signal
1	STRB	8	D6
2	D0	9	D7
3	D1	10	
4	D2	11	BUSY
5	D3	12	
6	D4	13	FAULT
7	D5	14	GND

SERIAL port connector
(EIA RS-232C interface)

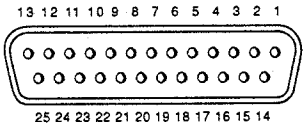

Pin No.	Signal	Pin No.	Signal
1	Frame GND	14	
2	TXD	15	TXclock (input)
3	RXD	16	
4	RTS	17	RXclock (input)
5	CTS	18	
6	DSR	19	
7	GND	20	DTR
8	DCD	21	
9		22	RI
10		23	
11		24	
12		25	
13			

Pin assignment is common to channels 0 and 1.

NETWORK connector
(Ethernet interface)

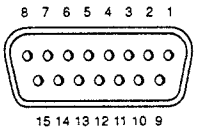

Pin No.	Signal	Pin No.	Signal
1	Shield	9	Collision –
2	Collision +	10	Transmit –
3	Transmit +	11	
4		12	Receive –
5	Receive +	13	Power
6	Return	14	
7		15	
8			

KEYBOARD connector
(TTL level serial interface)

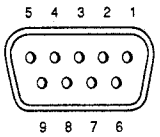

Pin No.	Signal	Pin No.	Signal
1	+ 5V	6	Reserved
2	Buzzer	7	Mouse data
3	Key data	8	Remote
4	Reserved	9	GND
5	GND		

MIC/SP BOX connector

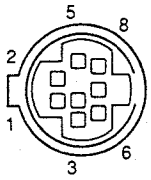

Pin No.	Signal	Pin No.	Signal
1	LINE OUT (left channel)	5	GND
2	LINE OUT (right channel)	6	LINE IN (left channel)
3	GND	7	LINE IN (right channel)
4	+5V	8	–5V

Contents

Document and command conventions 1-31
Introduction 1-32
System setting 1-33
Activating the ROM Monitor 1-33
Using the command line 1-34
Edit mode 1-35
ROM Monitor commands 1-36
bf (Block of memory fill) 1-37
bm (Block of memory move) 1-37
bo (Boot) 1-38
cls (Clear terminal screen) 1-40
cp (Copy) 1-40
di (List disk information) 1-40
eject (Eject floppydisk) 1-41
format (Format floppydisk) 1-41
he (Help) 1-41
ld (Load from device) 1-41
md (Memory display) 1-42
ms (Memory aet) 1-42
off (Power off) 1-43
revarp (Reverse ARP) 1-43
set (Set environment variable) 1-44
sv (Save to device) 1-45
vers (Version number) 1-45
Specifying a device 1-46
SCSI device 1-47
Other devices 1-48

Document and Command Conventions

In this manual, command formats use the following symbols:

Courier Bold	is used within examples to show command lines and options that should be typed verbatim on the screen.
Courier	is used within the body of the text to show: ☐ Command lines or options that should be typed verbatim on the screen. is used within examples to show: ☐ Computer-generated output. ☐ The contents of files.
[Ctrl+A]	Press the Control key along with another specified key, in this case A.
Italic	is used to show: ☐ Command or device names ☐ Parameters which you enter according to your particular needs, or system messages which vary depending on your system configuration.
man(#)	The number included in parentheses following a command name indicates the On-Line Manual's section number. Example: *disklabel(8)* indicates that you can find more information regarding the disklabel command in the On-Line Manual's section number 8.

Before beginning to use the ROM Monitor, make sure peripheral devices are connected and all DIP switches are set.

Activating the ROM Monitor

Turn on the power to your workstation. The ROM Monitor is automatically activated.

After performing a simple hardware test, the ROM Monitor enters one of the following two modes according to the DIP switch settings:

- ☐ Monitor mode
  The ROM Monitor enters monitor mode when the autoboot bit of the DIP switch has been set to OFF. The prompt NEWS> appears on the screen and the system is ready to accept commands. Specific commands which can be used in monitor mode are explained on the following pages.

- ☐ Autoboot mode
  The ROM Monitor enters autoboot mode when the autoboot bit of the DIP switch has been set to ON. In this mode, NEWS-OS automatically boots when the power is turned on.

Using the Command Line

You can enter commands when the prompt NEWS> displays on the screen.

Press the "P" and the Ctrl key simultaneously to display the latest command line input. The cursor moves to the right of the last character. With the command line displayed, you can use the Backspace key to delete characters.

Edit Mode

Press the Esc key to enter edit mode. You can now move the cursor, delete characters, and insert characters in a manner similar to the *vi* editor. Table 1 shows the command keys and their functions available in the edit mode:

Table 1. Command Keys for Edit Mode

Key	Function
h (bs)	Moves the cursor one character to the left. (bs: Backspace)
l	Moves the cursor one character to the right.
x	Deletes the current character.*
o	Moves the cursor to the beginning of the current line.
$	Moves the cursor to the end of the current line.
D	Deletes from the cursor position to the right of the screen.
a	Adds text after the cursor position automatically enters insert mode.
i	Inserts text before the cursor position.
A	Appends text to the current line.
r	Replaces the current charactes.

* The "current character" is the character the cursor is on.

After you enter insert mode by pressing the "a", "i" or "A" key, any characters typed from that point on will be inserted at the cursor position. You can exit insert mode and return to edit mode by pressing the Esc key.

Whichever mode you are in, pressing the Return key immediately executes the current command line.

ROM Monitor Commands

ROM monitor command formats are explained in this section. Table 2 lists format conventions for the commands.

Table 2. ROM Monitor Command Conventions

Convention	Meaning
[ ]	An argument which can be omitted. When omitted, the default value of the argument is used.
{a|b}	"a" or "b" may be specified.
---	A multiple number of arguments may be specified.
<addr>	Address (Hex)
<ofs>	Offset memory address (Hex)
<bootsw>	Boot switch (Hex)
<cnt>	Number of counts (Hex)
<value>	Numerical data (Hex)
<c>	Controller number
<u>	Unit number
<p>	Partition number
<b>	Bus number
<i>	Initiator number
<str>	String
<pathname>	Path name on a file system
<devspec>	Device specification

All numbers indicating addresses and counts are assumed to be hexadecimal values. In order to specify decimal numbers you must attach # in front of each value. When % is attached to a value, it indicates a disk block number in decimal notation, such as %1 = #512 = 200.

For R3000 CPU models, any memory address specification is assumed to indicate a logical address. In other words, the head of main memory is 80000000 (hex) in a cached memory space [KSEG0 (Kernel, Unmapped, Cached)], and a0000000 (hex) in an uncached memory space [KSEG1 (Kernel, Unmapped, Uncached)]. However, when a value between 00000000 and 7fffffff is given to a command argument to indicate a memory address, it is automatically converted into an uncached memory address and the command is executed accordingly.

bf (Block of memory fill)

Format

```
bf[.{b|f|l}]<addr1>{<addr2>|:<cnt>}<value>
```

Description

The *bf* command fills a range of memory with data designated by <value>. The memory range is specified by the start address <addr1> and end address <addr2> (or <cnt> number of fields from <addr1>).

The length of one field is specified by b|w|l, which indicates byte (b), word (w) and long word (l), respectively. The default value of this argument is a word.

Note
In the R3000 CPU conventions, 32-bit data is called "word" and 16-bit data is called "half-word". To avoid any confusion, this manual calls them "long word" and "word," respectively, as in the 68030 CPU conventions.

Data designated by <value> is set justified to the field right regardless of field length. When this exceeds specified field length, upper bits are ignored and the remainder is set to the field.

When the number of bytes in the designated memory range is not a multiple of field length, the number of data to fill the range will be the maximum integer which does not exceed (*memory range*)/(*field length*).

bm (Block of memory move)

Format

```
bm <addr1>{<addr2>|:<cnt>}<addr3>
```

Description

The *bm* command copies a range of memory specified by the start address <addr1> and end address <addr2> (or <cnt> number of fields from <addr1>) to another place in memory as designated by <addr3>.

A count <cnt> argument specifies the number of bytes to be copied.

bo (Boot)

Format

```
bo[/<value>][<devspec>[<pathname>]]
```

Description

The *bo* command boots NEWS-OS from the device <devspec> according to the boot switch specified by <value>. For details on <devspec> and <value>, refer to Table 3 and the "Specifying a Device" section later in this guide.

The default <devspec> is the device specified by the global variable *bootdev*. For details on environmental variables, refer to the set command later in this guide.

The boot file name <pathname> designates a NEWS-OS boot program. The <pathname> default is */boot*.

Note
Do not place any separator such as a space between <devspec> and <pathname>.

The boot switch <value> specifies the booting method for system start up. This switch is expressed as 32-bit data. The significance of each bit value is shown in Table 3.

Table 3 Boot Method Specification Bits

Bit	Meaning
0	CPU program specification bit 0: Executes /vmunix on the boot device. 1: Prompts for the name of a CPU initial program and executes it.
1	Mode specification bit 0: Multi-user mode 1: Single-user mode
2–3	Always 0
4	System init program specification bit 0: Executes /etc/init. 1: Prompts for the name of a system init program, and executes it.
5	Root device specification bit 0: Specifies the device which booted /vmunix as the root device. 1: Uses the device which was specified when /vmunix was compiled.
6	IOP program specification bit (Available only on models equipped with an I/O processor) 0: Executes /mrx on the boot device. 1: Prompts for the name of the I/O processor's initial program name and executes it.
7–31	Always 0

Example

When you want to start the system in the single-user mode, enter the following:

```
NEWS> bo /2
```

If your workstation is equipped with an I/O processor and you want to specify the I/O processor's initial program when starting the system, enter the following:

```
NEWS> bo /40
```

When <value> is omitted, 0 is assumed to be the boot switch.

cls (Clear terminal screen)

Format

```
cls
```

Description

The *cls* command clears the console screen and moves the cursor to its home position.

cp (Copy)

Format

```
cp<devspec1><ofs1>{<ofs2>|:<cnt>}<devspec2><ofs2>
```

Description

The *cp* command copies the designated range of data from a device specified by <devspec1> to another specified by <devspec2>.

For details on the source device <devspec1> and the destination device <devspec2>, refer to the "Specifying a Device" section later in this guide.

The range of data to be copied is between the offset head address <ofs1> and the end address <ofs2>, or <cnt> number of bytes from the offset head address <ofs1>. The data position in a device is specified by the number of bytes from the device head, but all values including <cnt> must be an integer multiple of 0x200 (Hex).

Note
The same device name cannot be specified both as <devspec1> and <devspec2>.

di (List disk information)

Format

```
di [<devspec>]
```

Description

The *di* command displays the partition information written in a device specified by <devspec>. For details on the <devspec> specification, refer to the "Specifying a Device" section later in this guide.

When <devspec> is omitted, the *di* command displays the partition information of a device specified by the environment variable *bootdev*.

eject (Eject floppydisk)

Format

```
eject
```

Description

The *eject* command is used to eject a 3.5-inch micro floppydisk from the drive.

format (Format floppydisk)

Format

```
format {fd|fh}
```

Description

The *format* command is used to initialize a 3.5-inch micro floppydisk. Specify *fd* when formatting a 1M byte floppydisk (2DD), and *fh* for a 2M byte floppydisk (2HD).

he (Help)

Format

```
he
```

Description

The *he* command calls up the monitor mode help function. All command formats which can be used in monitor mode are displayed together with simple explanations.

ld (Load from device)

Format

```
ld<devspec><ofs1>{<ofs2>|:<cnt>}<addr>
```

Description

The *ld* command reads a range of data on a device specified by <devspec> into the memory address specified by <addr>. The range of data to be read is between the offset start address <ofs1> and end address <ofs2>, or <cnt> number of bytes from <ofs1>. The data position in a device is specified by the number of bytes from the device head, but all values including <cnt> must be integer multiples of 0x200 (Hex).

md (Memory display)

Format

```
md[.{b|w|l}][<addr1>[{<addr2>|:<cnt>}]]
```

Description

The *md* command displays the memory contents within a range specified by the start address <addr1> and the end address <addr2>, or the count number of field <cnt>. The memory contents are divided into blocks of specific field lengths and displayed in hexadecimal.

The *md* command accepts either byte (b), word (w) or long word (l) data. The default data type is a word.

A count <cnt> argument specifies the number of data fields to be displayed. The default value is 8 when the power is turned on. Once *md* is executed with <cnt> specified, the value of <cnt> becomes the default until the command is executed with a different <cnt> value.

After executing *md*, the command can be repeated by pressing the Return key at the NEWS> prompt. A number of data fields equal to the default count number are displayed from the address following the address last displayed.

ms (Memory set)

Format

```
ms[.{b|w|l}][<addr>[<value>]]
```

Description

The *ms* command is used to write <value> to the memory address specified by <addr>.

The length of one field is specified by b|w|l, which indicates byte (b), word (w) and long word (l), respectively. The default is a word.
Input data is stored right justified in the field regardless of field length: byte, word and long word.

When this exceeds the specified field length, upper bits are ignored and the remainder is set to the field.

If both <addr> and <data> are specified, data is written in address, and control returns to the ROM monitor.

If <addr> is specified and <value> omitted, the specified field length of memory content is read from the specified address and output to the console together with the address. The desired data can be entered here. When the Return key is pressed following data entry, memory content will be replaced by newly entered data and data of the next address will be displayed. If the Return key is pressed without entering new data, memory content will remain as is, and data for the next address will be displayed.

If the Return key is pressed without entering new data, memory content will remain as is, and data for the next address will be displayed.

Entering ^ or – causes the address to go back one address before; entering "." returns control to the ROM Monitor.

When *ms* is executed without <addr>, data is written to the default address 00000000, or to an address next to the last accessed address (if *ms* has previously been executed).

off (Power off)

Format

```
off
```

Description

The *off* command is used to turn off the power to the workstation.

Note
When a floppydisk is in the drive, it will be ejected before the power is turned off.

revarp (Reverse ARP)

Format

```
revarp
```

Description

The *revarp* command broadcasts a Reverse Address Resolution Protocol (Reverse ARP) request packet on the Ethernet network, and checks and displays the workstation's own Internet address. To use this command, at least one server that knows the workstation's Ethernet/Internet address and is able to respond to its reverse ARP request must be functioning on the network

set (Set environment variable)

Format

```
set[<var>|=<str>]]
```

Description

The *set* command assigns a value to an environment variable which is used by the ROM Monitor.

Note
This command is only effective on environmental variables of the ROM monitor. It has nothing to do with those on the NEWS-OS.

When both <var> and <str> are specified, <str> is set to the variable <var>. When the argument after "=" is omitted, the <var> variable is erased and any variable setting is canceled. Executing this command without any argument displays information for all relevant variables and their current values.

You can refer to the value set to a variable on the ROM Monitor command line by attaching $ to the beginning of the variable name. For example, after entering:

```
NEWS>set d=md .b 0:100
```

you can simply enter:

```
NEWS>$d
```

rather than entering:

```
NEWS>md .b 0:100
```

Note
Do not enter any delimiter such as a space before "=".

As a special environment variable, *bootdev* is provided. Use this variable to specify the default device name which will either be referred to in auto-boot mode, or will be used when no device name is specified in commands such as *bo*. For example, entering the following enables auto-boot from the device *sd(1)*:

```
NEWS>set bootdev=sd(1)
```

When this variable is not set, the system assumes **sd(0,0,0,0,7)** as the default boot device. The bootdev variable setting is retained even if you turn off the power to the workstation.

sv (Save to device)

Format

```
sv<addr1>{<addr2>|:<cnt>}<devspec><ofs>
```

Description

The *sv* command writes a range of data between the start address <addr1> and end address <addr2>, or <cnt> number of bytes from <addr1>, at the address <ofs> of a device specified by <devspec>.

For details on the <devspec> specification, refer to the "Specifying a Device" section later in this guide.

vers (Version number)

Format

```
vers
```

Description

The *vers* command displays the ROM Monitor version number together with the workstation's serial number and its Ethernet address.

Use this command to check the Ethernet address of your workstation. Before performing a network boot, you must notify the server machine of the address obtained by this command.

Specifying a Device

Use the following format to specify a device in <devspec>:

```
<name>([<c>[,[<u>][,[<p>][,[<b>][,[<i>]]]]]])
```

The arguments are as follows:

Argument	Significance
<name>:	Device type
<c>:	Controller number
<u>:	Unit number
<p>:	Partition number
<b>:	SCSI bus number
<i>:	SCSI initiator number

Note
These arguments may not be applicable to certain devices. Before specifying a device, refer to its hardware manual to determine the arguments.

Do not enter any delimiter (such as a space) between <name> and the subsequent "(".

The following devices can be specified as <name>:

Device name	Device
sd	SCSI disk
st	SCSI tape
rd	Remote disk
fd	1M byte floppydisk
fh	2M byte floppydisk
mm	Memory

The <devsw> argument is the device specification switch. Set this switch to one of the following device type groups:

- ☐ SCSI device (sd, st)
- ☐ Remote disk device (rd)
- ☐ Floppydisk, memory device (fd, fh, mm)

SCSI Device

The SCSI device (sd and st) specification switch assumes the following format:

```
[<c>[,[<u>][,[<p>][,[<b>][,[<i>]]]]]]
```

<c> specifies the controller number which corresponds to the SCSI device channel number.

<u> specifies the unit number of a drive connected to each controller.

<p> specifies one of the drive's partitions. The partition numbers 0 through 7 are assigned to partitions a through h. To specify the drive's partition size, use the NEWS-OS *disklabel* command. If the partition size has not been specified using this command, the ROM Monitor accepts only "0" for <p>. You cannot specify any value other than 0 for <p> when using a SCSI device.

<b> is a valid specification on a machine equipped with multiple SCSI buses. Specify <b> as one of the SCSI bus numbers. For other models with a single SOCI bus, you cannot specify any value other than 0.

<i> specifies the SCSI device channel number which is assigned to the SCSI controller inside the workstation. Do not specify a SCSI device channel number which has already been assigned to another device.

Valid ranges and default values for each switch are as follows:

Name	Symbol	Valid range	Default
Controller number	<c>	0 to 7	X
Unit number	<u>	0 to 7	0
Partition number	<p>	0 to 7	0
Bus number	<b>	0 to N	0
Initiator number	<i>	0 to 7	7

N = (Number of SCSI bus) – 1
X = 0 (when the device is **sd**) or 5 (when the device is st)

Other Devices

Specifications <c>, <u>, <p>, <b> and <i> are ignored when the target is a non-SCSI device. In that case, enter as follows:

```
<name>()
```

CHAPTER 2
REMOVAL

- Perform the following removal in numerical order given.

2-1. Top Cover

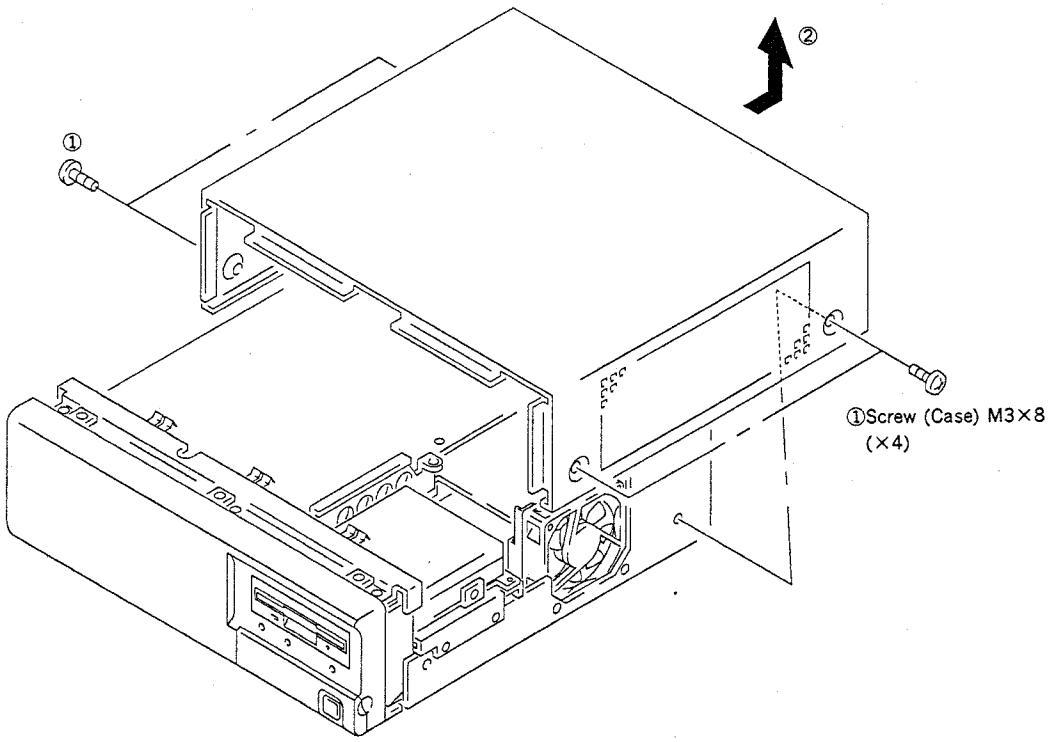

2-2. Board Chassis Assy
Board Panel (For brank) Assy

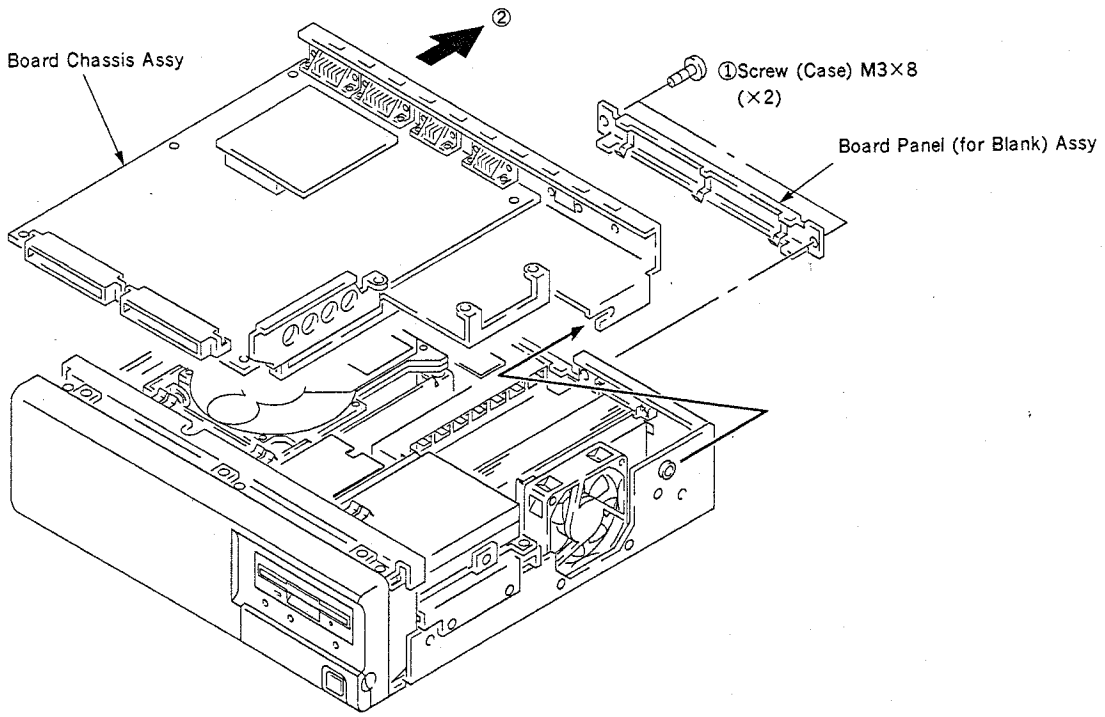

Cautions

- Before removal, be sure to unplug the unit.
- Do not drop HDD (Hard Disk Drive unit) or bump it against other objects.

2-3. MOD-3/MPU-12 Board Board Chassis Sub Assy

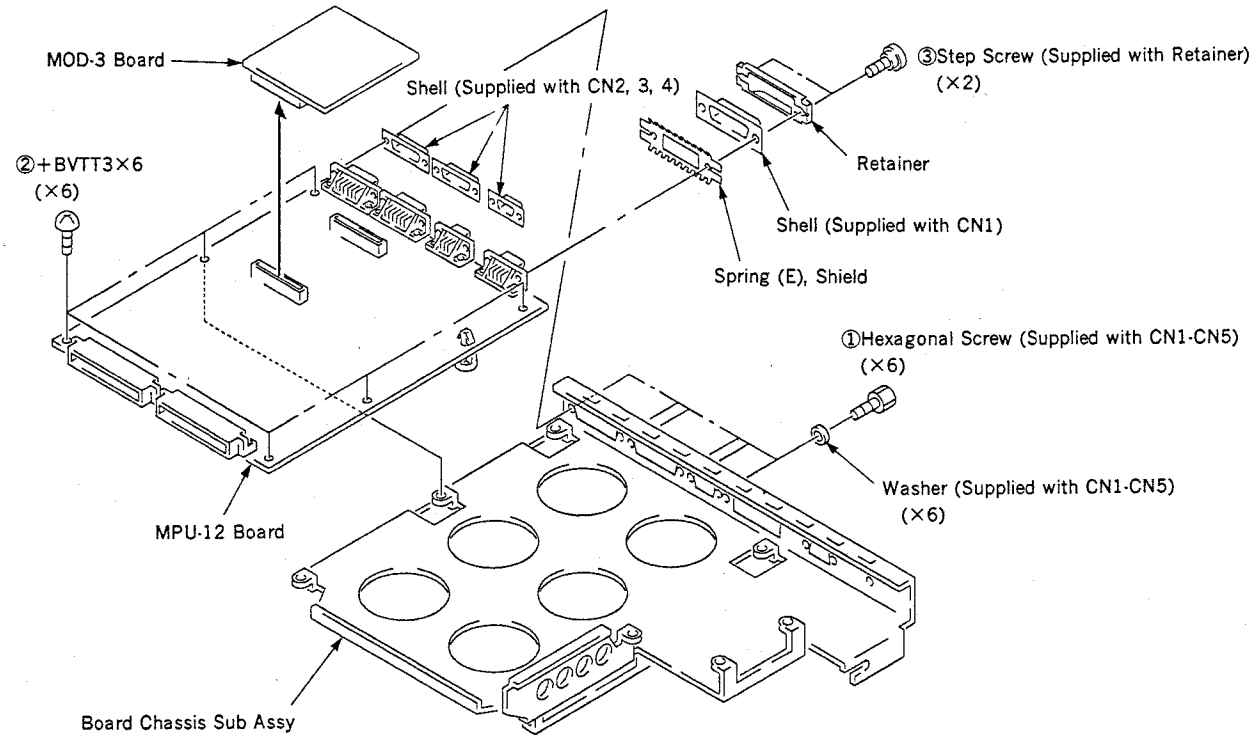

2-4. HDD (NWS-3460)* DA-4 Board

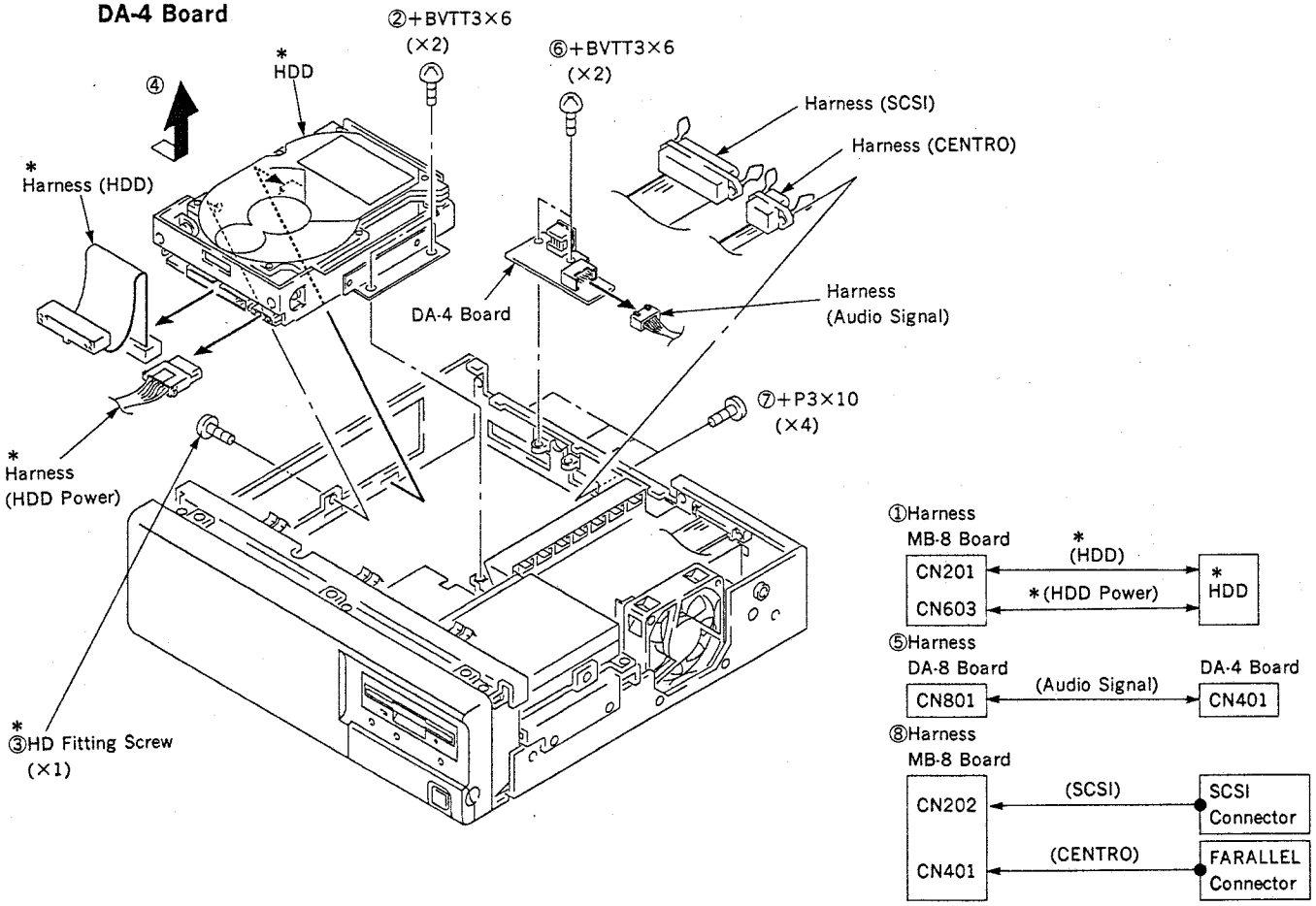

①Harness

⑤Harness

⑧Harness

2-5. MFD
DA-7/8 Board

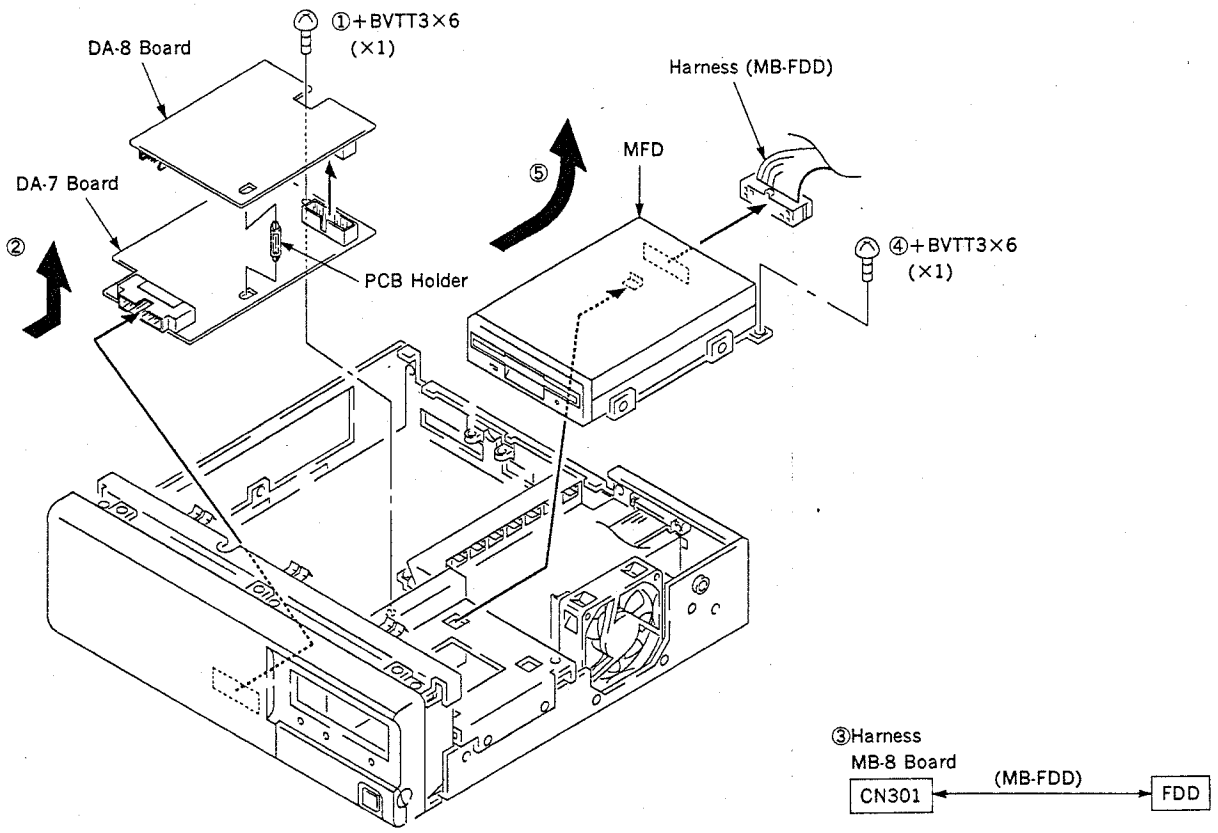

2-6. Power Cover/Shield Plate
FDD Chassis

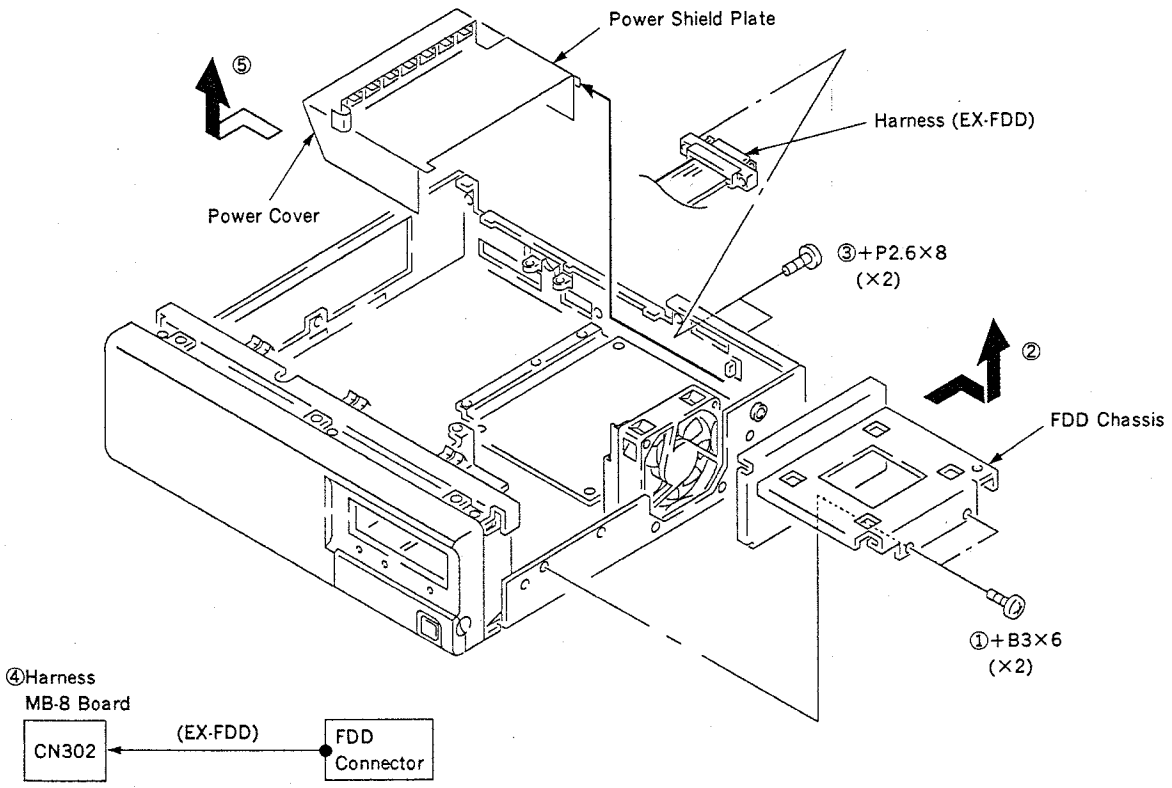

2-7. Fan Motor
Switching Regulator
Ring Core Assy

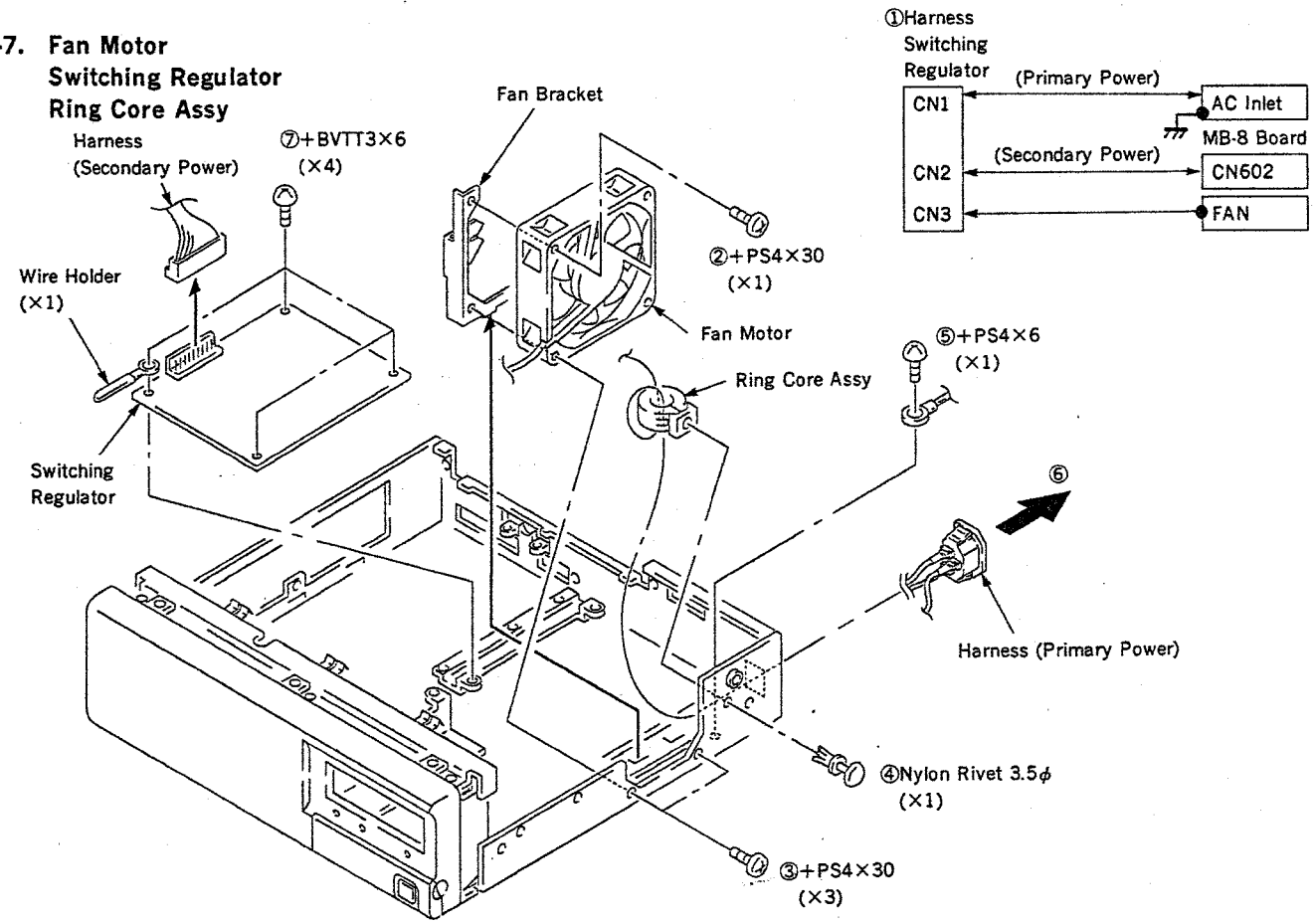

2-8. Front Panel/SW-7 Assy
Front Stay Assy

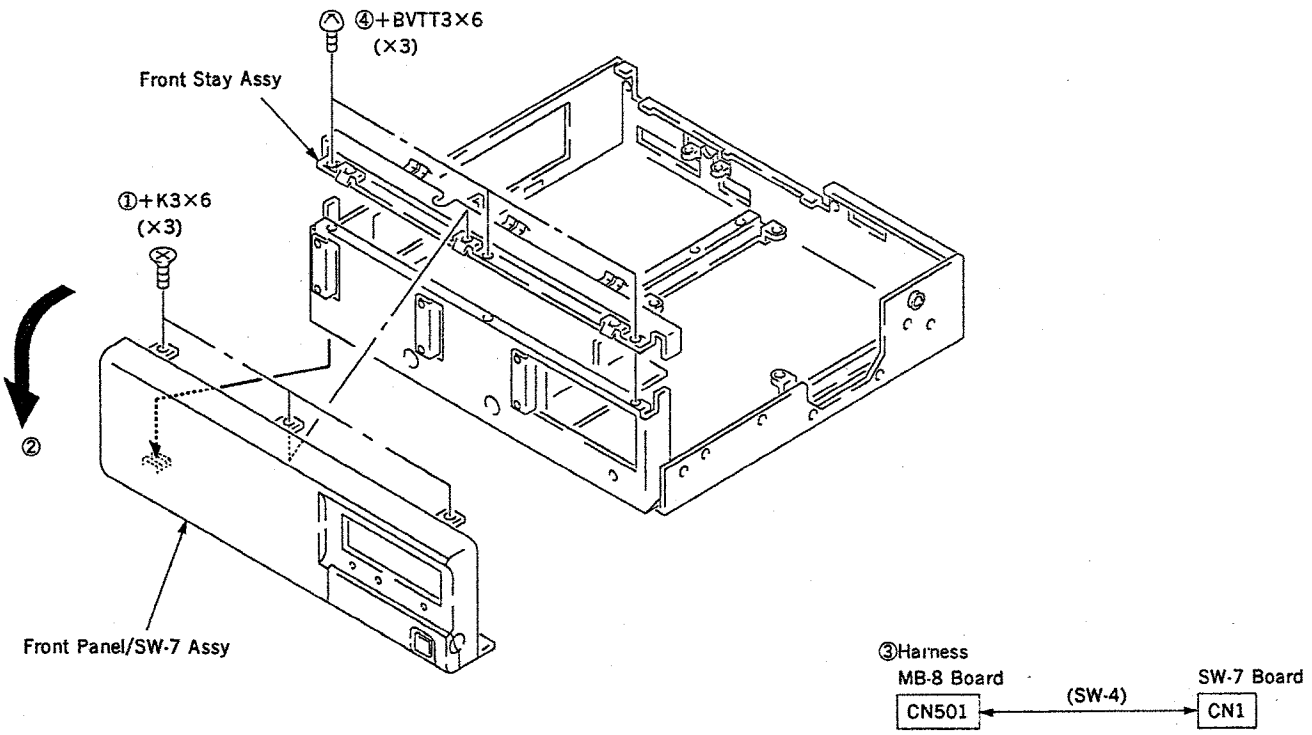

2-9. Front Panel Assy
Door
Button (Power on)
SW-7 Board

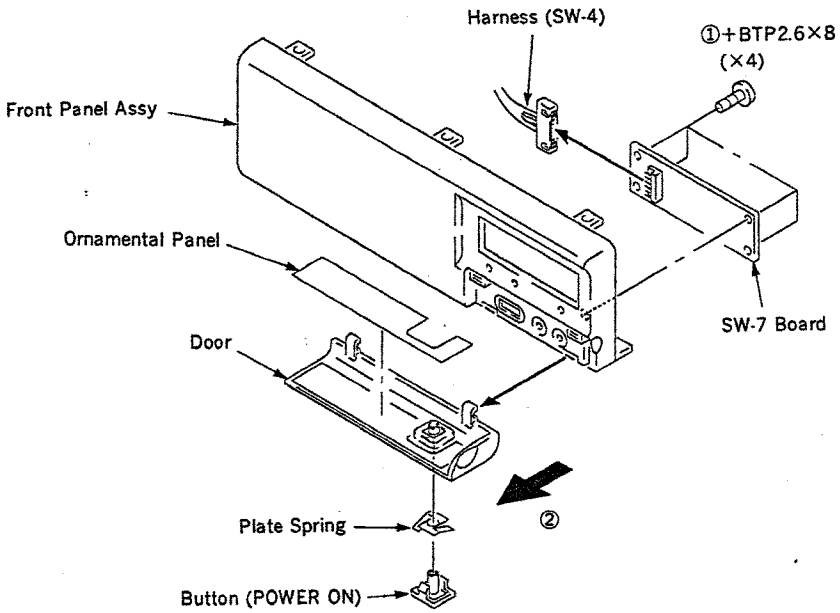

2-10. MB-8 Board
Terminator (NWS-3410)*

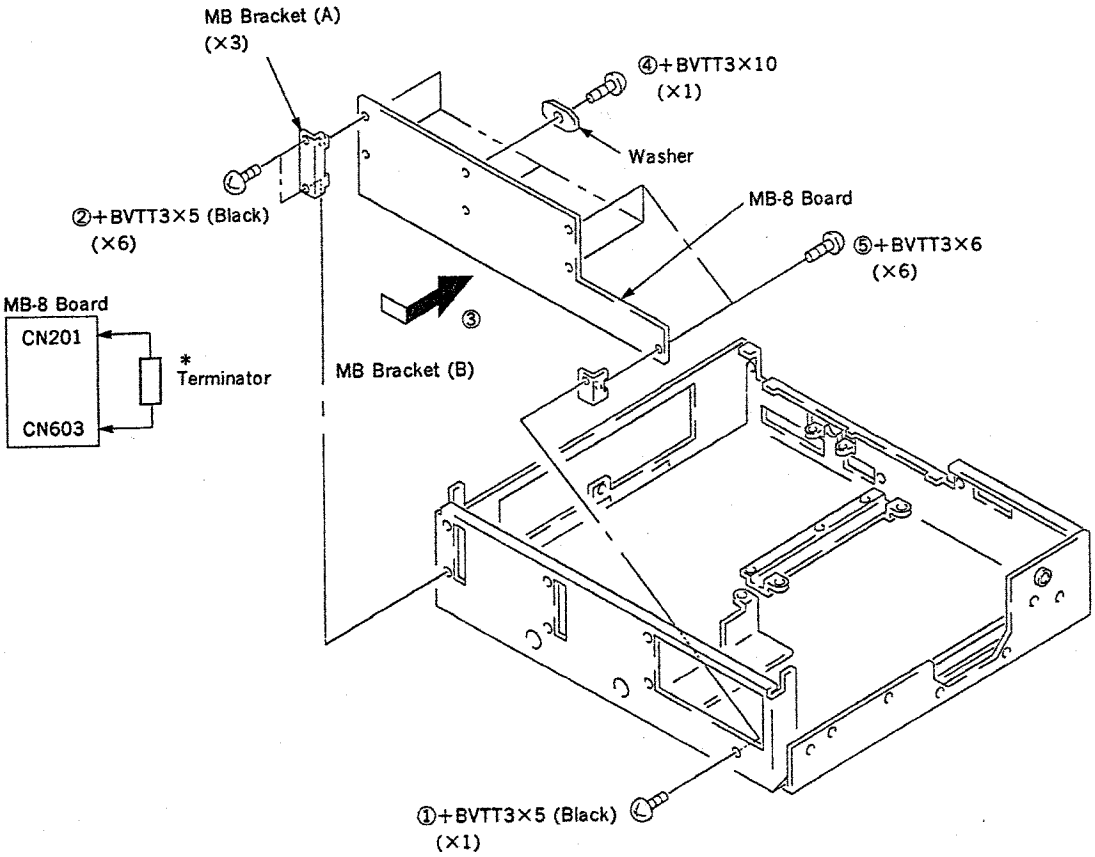

CHAPTER 4
SELF-DIAGNOSIS

This document describes how to enter the self-diagnostic mode for the **NEWS 3400** series and how to use the commands available in this mode as well as examples of displays provided.

4-1. ENTERING THE SELF-DIAGNOSTIC MODE

To perform this self-diagnosis on the NEWS 3400 Series, the system must be set up as follows :

1) The following five types of devices may be used as input/output devices for the **NEWS 3400 series.**
   a) Connect a terminal (the **NWP-511 (F)** or a character terminal) to the serial port **(CH.0)**.
   b) Insert the **NWB-514** board into I/O slot and connect the monochrome bit mapped display (**NWP-514**) and the keyboard (**NWP-411** or **NWP-410**).
   c) Insert the **NWB-251** board into I/O slot and connect the monochrome bit mapped display (**NWP-513** or **NWP-516**) and the keyboard (**NWP-411** or **NWP-410**).
   d) Insert the **NWB-252** board into the dedicated bit mapped display connector and connect the color bit mapped display (**NWP-515** or **NWP-519**) and the keyboard (**NWP-411** or **NWP-410**).
   e) Insert the **NWB-253** board into the dedicated bit mapped display connector and connect the monochrome bit mapped display (**NWP-512D** or **NWP-518**) and the keyboard (**NWP-411** or **NWP-410**).

2) Install appropriate jig to **NETWORK, SERIAL** and/or **PARALLEL** ports if needed. See the attachments. Also, connect the dedicated color bit mapped interface board (**NWB-252**) and the keyboard (**NWP-410** or **NWP-411**)

3) Open the front cover and set **Bit 6** of the DIP switch to the **"ON"** position. Set the following bits of the DIP switch depending on your input/output unit selection.
   a) When connecting a terminal to the serial port (**CH.0**) Set all the bits other than Bit 2 to the **"OFF"** position.
   b) When connecting the **NWB-514** and monochrome bit mapped display (**NWP-514**) Set **Bits 1, 2 and 3** to the "ON" position.
   c) When connecting the **NWB-251** and color bit mapped display (**NWP-513/516**) Set **Bits 1, 2 and 3** to the **"ON"** position.
   d) When connecting the **NWB-252** and color bit mapped display (**NWP-515/519**) Set **Bit 2** to the **"ON"** position.
   e) When connecting the **NWB-253** and monochrome bit mapped display (**NWP-512/518**) Set **Bit 2** to the **"ON"** position.

4) Insert the self diagnostics floppy disk for **NEWS 3400 series** into the drive. Note that this floppy disk should be write protected.

5) Turn on the **NEWS 3400 series** system unit.

Once the power is turned on, a simple self-diagnosis on the main memory and floppy disk drives is first performed by the internal system ROM of the system unit. After this, the self diagnostic program is loaded from the floppy disk and then executed.
The screen shows the following display :

```
**** Diagnostic mode ****

PHASE 1: D-RAM CELL TEST

TESTING MAIN MEMORY ..... FROM 0xa0000000 THROUGH 0xa07f7fff



PHASE 2: FDC AND FDDCHECK

SEND SPECIFY COMMAND ..... DONE
SET CTRL INTERNAL ..... DONE
SELECT ECMA FORMAT ..... DONE
TURN MOTOR ON ..... DONE
SENSE DEVICE ..... DONE
        DRIVE STATUS ..... READY
SEND RECALIBRATE COMMAND .... DONE
        WAITING FOR INTERRUPT ..... OK
        CHECK RESULT STATUS ..... OK
SEND SEEK COMMAND ..... DONE
        WAITING FOR INTERRUPT ..... OK
        CHECK RESULT STATUS ..... OK
SEND READ COMMAND ..... DONE
        WAITING FOR INTERRUPT ..... OK
        CHECK RESULT STATUS ..... OK

loading diagnostic program...
Boot0 4.0R loading fh(0,0,0)/diag/main
Boot 4.0R (news3400)
: fh(0,0,0)/diag/kern
TEXT start = 0xa0020000, DATA start = 0xa0023820, entry = 0xa0020000
.text:  address = 0xa0020000    size = 0x3820
.data:  address = 0xa0023820    size = 0x12d0
.text:  address = 0xa0038000    size = 0x18470

SONY NET WORK STATION
Diagnostic Floppydisk : SERVICE
Model : NWS-3460
Version 1.00

Copyright (c) 1990 by Sony Corporation
```

The above display on the version of the self-diagnostic program.

Once the "kern" program starts, the following diagnostic menu (self-tests) appears on the display and the prompt "**diag>** " is displayed, waiting for your command input.

```
   0.  all       [-v][-c][-#][-N{x[,y,...] | x+X | Y+y}]          : Check All
   1.  memory    [-v][-c][-#][-b][-w][-l][-dt][-adr]              : Main Memory
   2.  cache     [-v][-c][-#]                                     : Cache Memory
   3.  fpcp      [-v][-c][-#]                                     : FPCP
   4.  buserr    [-v][-c][-#]                                     : Buserror
   5.  eprom     [-v][-c][-#]                                     : EP-ROM
   6.  idrom     [-v][-c][-#][-dump]                              : ID-ROM
   7.  timer     [-v][-c][-#]                                     : Timer intr
   8.  network   [-v][-c][-#][-ne]                                : Network
   9.  rtc       [-v][-c][-#][-fn]                                : RTC
  10.  dmac      [-v][-c][-#][-reg][-map][-rw][-intr][-shift]     : DMA Controller
  11.  scsi      [-v][-c][-#][-d#]                                : SCSI/Hard Disk
  12.  bitmap    [-v][-c][-#][-s]                                 : NWB-252 Bitmap
  13.  parallel  [-v][-c][-#]                                     : Parallel port
  14.  serial    [-v][-c][-#][-ch#]                               : Serial ports
  15.  keyboard  [-v][-c][-#][-o][-us]                            : Keyboard
  16.  mouse     [-v][-c][-#]                                     : Mouse
  17.  led       [-v][-c][-#]                                     : LED lamps
  18.  dipsw                                                      : DIP Switch
  19.  audio     [-v][-c][-#][-id][-fifo][-da][-ad][-adpcm]       : Audio
  20.  floppy    [-v][-c][-#][-a][-dd][-hd][-f][-t#][-d#]         : Floppy Disk
  21.  mon                                                        : ROM monitor
  22.  off                                                        : Power off
  23.  menu                                                       : Display menu
  24.  ver                                                        : Show Version
diag>
```

The commands available in this mode are detailed in Section 4-3.

4-2. SELF-DIAGNOSIS

4-2-1. Entering commands

To enter a command, type the corresponding number (in the first column of the menu) or the command name (in the second column) followed by < RETURN> .
For example, to check main memory, enter **"memory"** or **"1"**.
The rightmost column of the menu shows the title of each check.
The column at the right of the command name column shows the option(s) of each command.
By appending option(s) to a command, you can select the additional function(s) of the command.
To append options to a command, enter the options after the command name as shown below.

"command -option1 -option2"

The common options available for the commands are as follows :

-v option :

Specify the option **"-v"** to enable the verbose mode.
This mode provides detailed current information during self-diagnosis.

-c option :

Specify the option **"-c"** to enable the continue mode.
This mode will allow the program to continue the self-diagnosis even if any error occurs during it.
If this continue mode is disabled, the program will suspend the self-diagnosis if any error occurs.

-# option :

Specify a decimal number for the option "-#" to repeatedly execute the command by the specified number.
If this option is omitted, the command will be executed only once.

If the next command to be entered has the same option as the preceding command, its option may be replaced by entering two exclamation marks **"!!"**.
An option may be further added to the same option as the preceding command by entering **"!!-option"**.
If the preceding command is misspelled or if you want to modify the option of the preceding command, the modify function is available. To use this modify function, place a caret "^" and enter the characters to be modified of the preceding input string, followed by a caret "^" and the characters to replace them.
For example, the preceding input is "abc -def". If you want to modify this string to **"xyz -def"**, enter **"^abc^xyz"**. To modify this string to **"abc -dkf"**, enter **"^e^k"**.
To cancel the command being executed during diagnosis, enter **"^C"** (hold down < Ctrl> key and press C key.), or press < **Del**> key (if you use the NWP-410 or NWP-411).

4-3. DESCRIPTION OF THE SELF-DIAGNOSIS

This section describes the displays and contents of the self-diagnosis for each check during the verbose mode.

Also, it describes results of the execution of each check command with its specific options as appropriate.

4-3-1. Main Memory command

The **Memory size** checks the capacity of the memory installed and displays it. The memory must be installed in contiguous address spaces. If the memory size is different from the displayed capacity, the problem may be the order of inserting memory boards.

The **Data lines** check is intended to examine data signal lines. It writes data with certain **one bit** set to **"1"** and the other **31 bits** set to **"0"** and then reads the data.

The **Byte access** first writes a pattern **55 (16)** by word access and checks whether the data can be read correctly. Then, it writes a pattern **AA (16)** and checks whether the data can be read correctly.

- The **Half word access** first writes a pattern **5555 (16)** by word access and checks whether the data can be read correctly. Then, it writes a pattern **AAAA (16)** and checks whether the data can be read correctly.

The Long word access first writes a pattern **55555555 (16)** by long word access and checks whether the data can be read correctly. Then, it writes a pattern **AAAAAAAA (16)** and checks whether the data can be read correctly.

The **Address lines** check first writes a pattern **FFFFFFFF (16)** to all the areas of memory to be checked and checks whether the pattern characters **FF (16)** can be read correctly by one byte from lower address. If correct, then it writes **00(16)** at that address and then reads and checks the data. This permits detecting faults in the address line.

```
diag> memory
MAIN MEMORY (D-RAM) CHECK:
TESTING MAIN MEMORY ..... FROM 0xa0100000 THROUGH 0xa07f7fff
        Memory  size ............................... 8MBytes
        Data  lines  ............................... OK
        Byte  access ............................... OK
        Half word access ........................... OK
        Long word access ........................... OK
        Address lines  ............................. OK
diag>
```

4-3-2. Cache Memory command

The "cache" command checks the external **cache memory**. This check provides functional checks of bits such as parity bit and stack bit, as well as cache renewal checks at access to cache and uncache areas for the cache in terms of data and instructions.

```
diag> cache -v
CACHE MEMORY CHECK:
  1: test the functionality of the PE bit              OK
  2: verifys that the instruction cache is updated on a load   OK
  3: data cache parity test            OK
  4: verify that data parity detects even parity       OK
  5: test instruction cache tag parity for stuck bits          OK
  6: test data parity generated for stores             OK
  7: verify KSEG0 is cached, verify KSEG1 is uncached          OK
  8: verify that TLB N bit controls cache      OK
  9: test the functionality of Isolate Cache bit in SR         OK
  10: data cache data test             OK
  11: test data cache tag for addressing and stuck bits        OK
  12: test data cache tag parity for stuck bits        OK
  13: test data cache valid bit for addressing and stuck bits  OK
  14: test instruction cache for addressing and stuck bits     OK
  15: test instruction cache tag parity for stuck bits         OK
  16: test instruction cache valid bit for addressing and stuck bits  OK
diag>
```

4-3-3. FPCP command

The **"fpcp"** command causes the floating-point coprocessor to execute floating-point four fundamental rules of arithmetic and it checks whether the result is good or not. Also, this checks determines whether the instructions supported can be executed, as well as whether various interrupts are generated normally.

```
diag> fpcp -v
FLOATING-POINT CO PROCESSOR CHECK:
  Calculation ..........................................................OK
  Conplex calculation...................................................OK




diag>
```

4-3-4. BUSERR command

The "buserr" command is issued to access the address at which a bus error occurs and check whether an bus error interrupt can be generated normally and whether the bus error address can be read. The program will access the two addresses : **0xb8123456** and **0xb8edcba9** to cause a bus interrupt to be generated.

```
diag> buserr -v
BUS ERROR CHECK:
        interrupt ..................................... OK
        BUS ERROR ADDRESS ( 0 )....................... OK
                latched error address = 18123456
                accessed address = b8123456
        interrupt ..................................... OK
        BUS ERROR ADDRESS ( 1 )....................... OK
                latched error address = 18edcba9
                accessed address = b8edcba9
diag>
```

4-3-5. EP-ROM command

The "eprom" command calculates the checksum of the EP-ROM and checks whether obtained data is correct or not. This allows you to confirm that the contents of the EP-ROM remain intact and that there are no abnormalities in the data and address buses and the control signals from the CPU to the EP-ROM.

```
diag> eprom -v
EP-ROM CHECK ..................................... OK
diag>
```

4-3-6. ID-ROM command

The "idrom" command calculates the checksum of P-ROM on the MPU board and checks whether the vendor code of the Ethernet address is correct nor not and whether the MPU board number is correct or not. Then, it displays information stored in the ROM. You need to determine whether the contents of the ROM such as lot date are good or not.

```
diag> idrom -v
ID-ROM CHECK:
        Checksum ..................................... OK
        Network information .......................... OK
        MPU board information ........................ OK
        Ethernet address : 08 00 46 00 01 15
        Network ID       : EN1
        MPU board code   : 12
        Model code       : 1
        MPU board name   : MPU-12
        Model name       : NWS-3460
        Serial no        : 010001
        Lot              : 1990-05
        env machine      : news3400
        env cputype      : r3000
        env ioptype      : none
diag>
```

4-3-7. Timer intr command

The "timer" command enables the timer for interruption at 100MHz and counts how many interval timer interrupts are generated for a second in the interrupt process routine and it checks whether the count is nearly 100. (This one second is created by a loop by the program.) If this count is not nearly 100, the reason may be the faulty time interrupt circuit or abnormal CPU clock which results in a loop time that does not match one second.

```
diag> timer -v
TIMER CHECK:
        Timer open ................................... OK
        Timer interrupt check ........................ OK
                Interrupt count = 100 / 100
diag>
```

4-3-8. Network command

Executing the "network" command requires connection of appropriate jig (Ethernet transceiver) to the **NETWORK** port at the rear panel of the system unit.

The **Buffer memory check** determines whether data can be read to and written from buffer memory (16 K bytes) for network communication correctly.

The diagnostics then executes the same **Data lines, Long word access, Half word access, Byte access, Address lines** and Dynamic bus sizing checks on buffer memory as on main memory.

The **LANCE (Am7990) initialize** is intended to initialize LANCE (Am7990) and verify that an interrupt to terminate the initialization is generated.

The **Internal loopback** sends data within LANCE and checks whether the data can be received correctly.

The **External loopback** sends data via an Ethernet transceiver on the network and checks whether the data can be received correctly.

In the **CRC logic** check, data is sent with a CRC calculated by software. After its reception, the CRC is then calculated again by software to check whether the CRC is the same as that of the data initially sent. Next, data is sent with a CRC calculated by hardware. After its reception, the CRC is then calculated by hardware to check whether the CRC is the same as that of the data initially sent.

The **Collision and retry logic** sets a flag to cause collision of LANCE and checks whether a retry is made or not by the collision.

Description of the option

-ne : no external option

Suppresses the checks to be made via an Ethernet transceiver.

Appending "-ne" to the "network" command will suppress the **"External loopback"** and **"Collision and retry logic"** checks. This option provides network check without Ethernet transceiver connected.

```
diag> network -v
NETWORK CHECK:
        Buffer memory check:
                Data line ..... OK
                Byte access ..... OK
                Word access ..... OK
                Long access ..... OK
                Address line ..... OK
        LANCE(Am7990) initialize ..... OK
        Internal loopback ..... OK
        External loopback ..... OK
        CRC logic ..... OK
        Collision and retry logic ..... OK
diag> !! -ne
network -v -ne
NETWORK CHECK:
        Buffer memory check:
                Data line ..... OK
                Byte access ..... OK
                Word access ..... OK
                Long access ..... OK
                Address line ..... OK
        LANCE(Am7990) initialize ..... OK
        Internal loopback ..... OK
        CRC logic ..... OK
diag>
```

4-3-9. RTC command

The "rtc" command is issued to check the RTC (Real Time Clock).

The **RTC Battery** checks the condition of the battery for RTC backup.

The **Static RAM** checks whether data can be read from and written to the built-in static memory of RTC correctly.

The **Starting the Oscillator** starts the oscillator in the stopped state in the RTC. (If "-#" option is specified, this check is made only in the first cycle of executing the rtc command.)

The **Leap Year Check** confirms that the date February 28 in a leap year is renewed by February 29th correctly.

The **New Month Check** confirms that the last day of an ordinary month is renewed by to the next month correctly.

The **NEW Year Check** confirms that the last day of the year is renewed by the next year correctly.

The **Stopping the Oscillator** causes the oscillator in the RTC to stop oscillating. This can prevent the battery from being wasted. (If "-#" option is specified, this check is made only in the last cycle of executing the rtc command.)

Description of the option

-fn : function option

Serves for easy implementation of the settings of the RTC. If this option is appended to the command, the program displays the prompt **"RTC function> "**, waiting for your command input. Enter appropriate command to execute the following functions :

Enter **"1"** or **"start"** to start the internal oscillator.

Enter **"2"** or **"stop"** to stop the internal oscillator.

Enter **"3"** or **"set"** to set the date (yy : mm : dd).

Enter **"4"** or **"read"** to read the current date (yy : mm : dd).

Enter **"0"** or **"exit"** to terminate the command.

```
diag> rtc -v
REAL TIME CLOCK CHECK:
        RTC Battery ..................................... OK
        Static RAM ...................................... OK
        Starting the Oscillator ......................... done
                set time->              1992/02/28 FRI 23:59:58
                Read after 1sec->       1992/02/29 SAT 00:00:00
        Leap Year Check ................................. OK
                set time->              1989/02/28 TUE 23:59:58
                Read after 1sec->       1989/03/01 WED 00:00:00
        New Month Check ................................. OK
                set time->              1988/12/31 SAT 23:59:58
                Read after 1sec->       1989/01/01 SUN 00:00:00
        New Year Check .................................. OK
        Stopping the Oscillator ......................... done
diag> ^-v^-fn
rtc -fn
REAL TIME CLOCK function service
        1.  start    the Oscillator
        2.  stop     the Oscillator
        3.  set      the Clock
        4.  read     the Clock
        0.  exit     this function
RTC function> read
Read the Clock ..................... 1989/01/01/SUN 00:00:01
RTC function> 0
diag>
```

4-3-10. DMAC Controller command

The "dmac" command is used to check the Dynamic Memory Access Controller.

The **Controller Registers** test determines whether data can be correctly read from and written to the individual controller registers on channels 1 to 3. The channel 1 of the DMA is connected to SCSI controller and the channel 2 is connected to FDD controller and the channel 3 to audio controller.

In the **Address Map**, the diagnostics tests the address conversion table in the DMA controller as memory. First it clears all entry data and then flag **"1"** from at the least significant bit sequentially in the **One Walk** and then it flags **"0"** from at the least significant bit sequentially in the **Zero Walk**. It verifies that the table serves as memory each time a write is made.

Performing the later tests requires the built-in audio interface. In the **Read Transfer**, the diagnostics reads data stored in FIFO of the audio interface by program I/O and it checks whether the read value is correct or not.

The **Write Transfer** is provided to read data stored by DMA in FIFO of the audio interface by program I/O and check whether the read value is correct no not.

The **Interrupt** sets the interrupt output mode just when there is no data in data transfer to and from the audio interface and checks whether an interrupt is generated to the CPU properly.

The **Data Shift** verifies the operation when the starting address of main memory in DMA transfer is shifted from the long word boundary.

Description of the options

-reg : register option
Performs register check only.

-map : map table
Performs address conversion table check only.

-rw : read/write option
Performs Read/Write Transfer check only.

-intr : interrupt check
Performs interrupt check only.

-shift : byte shift
Performs Data Shift transfer check only.

-reg : register option
Performs register check only.

```
diag> dmac -v
DMA Controller CHECK:
        Controller Registers
        Chan(0)
                Register Reset ..................... OK
                TRC Bit Test ....................... OK
                OFFSETC Bit Test ................... OK
                TAGC Bit Test ...................... OK
                WIDC Bit Test ...................... OK
        Chan(1)
                Register Reset ..................... OK
                TRC Bit Test ....................... OK
                OFFSETC Bit Test ................... OK
                TAGC Bit Test ...................... OK
                WIDC Bit Test ...................... OK
        Chan(2)
                Register Reset ..................... OK
                TRC Bit Test ....................... OK
                OFFSETC Bit Test ................... OK
                TAGC Bit Test ...................... OK
                WIDC Bit Test ...................... OK
                Register Window .................... OK
        Address Map
        Chan(0)
                One Walk ........................... OK
                Zero Walk .......................... OK
        Chan(1)
                One Walk ........................... OK
                Zero Walk .......................... OK
        Chan(2)
                One Walk ........................... OK
                Zero Walk .......................... OK
        Read Transfer .............................. OK
        Write Transfer ............................. OK
        Interrupt .................................. OK
        Data Shift
                1-byte shift transfer .............. OK
                2-byte shift transfer .............. OK
                3-byte shift transfer .............. OK
diag>
```

4-3-11. SCSI/Hard Disk command

The "scsi" command is used to check the SCSI bus/hard disk drive.

The **Open Channel** checks whether the controller of the hard disk drive operates normally and it then displays its vendor ID, model name. and revision level. (But no error checking for the vendor ID, model name, and revision level information.)

The **Buffer size inquiry** determines the buffer memory size of the controller for the hard disk drive and then displays it.

The **Data write** checks whether data can be correctly written to the buffer memory of the controller for the hard disk drive.

The **Data read** checks whether data can be correctly read from the buffer of the controller for the hard disk drive.

The **Data verify** checks whether the read data from the buffer memory is matched with the written data to the memory.

The **DISK read first 1 block (async)** checks whether data on the hard disk drive can be read correctly by asynchronous transfer.

The DISK read first 1 block (sync) checks whether data on the hard disk drive can be read correctly by synchronous transfer.

Description of the options

-d# : drive number option (# = 0,1,2,3,4,5,6)

By entering "-d#", you can check the desired SCSI channel (drive number).

To check an external hard disk, specify the drive number with this option.

If this option is omitted, by default, the drive number is treated as "0" (internal drive).

Example : -d1 (to specify the drive number 1)

```
diag> scsi -v
SCSI/HARD DISK CHECK:
        Open Channel ............................... OK
                Vender  ID  : IMPRIMIS          (*)
                Model name  : WREN6-Half Height (*)
                Rev. level  : 0832              (*)
        Buffer size inquiry ........................ OK
                Buffer size : 49152 bytes       (*)
        Data write ................................. OK
        Data read .................................. OK
        Data verify ................................ OK
        DISK read first 1 block(async) ............. OK
        DISK read first 1 block(sync) .............. OK
diag>
```

4-3-12. NWB-252 Bitmap command

The "bitmap" commandchecks the dedicated slot for bit map using the bitmap display NWB-252. (**)

The **Board Initialize** reads the value of the DIP-SW on the NWB-252 board to check the board. Then, it initializes the CRTC, RAMDAC and color pallet.

The **VRAM MEMORY TEST** examines writes/reads to and from video memory of the NWB-252 board by performing them from both cache and uncache address spaces by byte, half word and long word accesses.

---

* The display depends on the model and version.

** All the bit map checks cannot be performed automatically. Check the screen to make sure that the vbideo image is displayed correctly.

The **First-Grade Kanji-ROM** verifies the checksum of the level-1 kanji set ROM on the NB-252 board.

The **Second-Grade Kanji-ROM** verifies the checksum of the level-2 kanji set ROM on the NB-252 board.

The **Interrupt Check** confirms that vertical synchronization signal interrupts are generated and the count is correct.

In the **CRTC Register**, the diagnostics accesses the CRTC of the NWB-252 from the extended I/O bus and checks whether the I/O bus signal in the bit mapped dedicated slot is normal or not.

```
diag> bitmap -v
BITMAP(NWB-252) CHECK:
        Board Initialize ........................... OK
        VRAM MEMORY TEST:
        long(32bit) access (cached) ................ OK
        long(32bit) access (uncached) .............. OK
        short(16bit) access (cached) ............... OK
        short(16bit) access (uncached) ............. OK
        byte(8bit) access (cached) ................. OK
        byte(8bit) access (uncached) ............... OK
        First-Grade Kanji-ROM ...................... OK
        Second-Grade Kanji-ROM ..................... OK
        Interrupt Check ............................ OK
        CRTC Register .............................. OK
diag>
```

Note : The bitmap check display all the message together after all the checks are completed.

4-3-13. Parallel port command

When issuing the "parallel" command, connect a printer having a Centronics interface to the **PARALLEL** port at the rear panel of the system unit. Appropriate Centronics jig may be connected in place of this printer.

When a printer is connected, this check detects the **BUSY** signal by polling and prints actually printable character data. Then, it detects the **BUSY** signal by interruption and print character data just like polling.

When the Centronics jig is used, this check turns **"ON"** one of the eight data signal lines, loop back its contents into the **BUSY** signal, and performs read check by polling. The **STB** signal is used to select one of the eight data signal lines so that all the signals lines can be examined.

Next, it checks the **BUSY** signal by interruption. Then it loops back Bit 0 of the data signal line into the **FAULT** signal. It then generates an interrupt at both the rising edge (1-> 0) and the falling edge (0-> 1) and checks whether interrupts are generated correctly.

```
diag> parallel -v
PARALLEL PORT CHECK:
Set PRINTER or TEST PROBE to the PARALLEL PORT and hit <RETURN> key
PARALLEL PORT CHECK:
        Write data by Polling ..................... OK
        Write data by Interrupt ................... OK
diag>
```

When a printer is connected

```
diag> parallel -v
Set PRINTER or TEST PROBE to the PARALLEL PORT and hit <RETURN> key
PARALLEL PORT CHECK:
        Data lines all Low ........................ OK
        Data lines ................................ OK
        Fault line ................................ OK
        Interrupt ..................................
                BUSY Interrupt ..................... OK
                FAULT(1 -> 0) Interrupt ............ OK
                FAULT(0 -> 1) Interrupt ............ OK
diag>
```

When Centronics jig is coennected

4-3-14. Serial ports command

To check the serial ports by issuing the **"serial"** command, appropriate serial port jig must be connected to the SERIAL ports (**CH.0** and **CH.1**) at the rear panel. (See the attachment.)

This check sends incremental pattern data from 0 to 255 to the serial ports (**CH.1** and **CH.0**) respectively from **TxD**, receives it via the jig to **Rxd**, and checks whether the receive data is matched with the send data. This check then sends **ON/OFF** data from **DTR**, receives it via the jig to **DCD/DSR**, and checks whether the send data is matched with the receive data. Also, it repeats the same check by sending and receiving data from and to **RTS** and **CTS/RI**.

The baud rate is set at 9000 baud. But this check cannot be used to check the baud rate.

Description of the option

-ch# : channel number option

Append this option to test the 4-ch serial interface board (**NWB-231A**) as a serial port. Specify the board number of the **NWB-231A** for the "#" parameter. If the **NWB-231A** is the second board, specify the board number added by 4 for the "#" parameter.

To test an optional serial port, appropriate jig for option serial port must be mounted on the corresponding board of the interface board. (See the attachment.)

Example : -ch0 (to specify **CH.0** of the first **NWB-231A** board)

Example : -ch7 (to specify **CH.3** of the second **NWB-231A** board)

```
diag> serial -v
SERIAL PORTS CHECK:
        Set TEST PROBE to the SERIAL PORT CH.1 and hit <RETURN> key
        SERIAL PORT CH.1:
                Controller open ..................... OK
                Characters loopback ................. OK
                DTR->DCD/DSR loopback 0 ............. OK
                DTR->DCD/DSR loopback 1 ............. OK
                RTS->CTS/RI  loopback 0 ............. OK
                RTS->CTS/RI  loopback 1 ............. OK
        Exchange TERMINAL from CH.0 to CH.1 and hit <RETURN> key (*)
        Set TEST PROBE to the SERIAL PORT CH.0 and hit <RETURN> key
        SERIAL PORT CH.0:
                Controller open ..................... OK
                Characters loopback ................. OK
                DTR->DCD/DSR loopback 0 ............. OK
                DTR->DCD/DSR loopback 1 ............. OK
                RTS->CTS/RI  loopback 0 ............. OK
                RTS->CTS/RI  loopback 1 ............. OK
diag> !! -ch0
serial -v -ch0
SERIAL PORTS CHECK:
        Set TEST PROBE to the OPTIONAL SERIAL PORT CH.0 and hit <RETURN> key
        OPTINAL SERIAL PORT CH.0:
                Controller open ..................... OK
                Characters loopback ................. OK
                DTR->DCD/DSR loopback 0 ............. OK
                DTR->DCD/DSR loopback 1 ............. OK
                RTS->CTS/RI  loopback 0 ............. OK
                RTS->CTS/RI  loopback 1 ............. OK
diag>
```

4-3-15. Keyboard command

The "**keyboard**" command allows you to check all the keys and the beep function as well as to perform an interrupt check on each key by operating the **NWP-411** keyboard.

When it enters the keyboard check, the diagnostics displays the layout of the keyboard and waits for your key input. Pushing any key and releasing it will display the corresponding key location in black-and -white reverse video. If all and any keys may be displayed in black-and-white reverse video, the keys on the keyboard are regarded as normal.

If you intend to test the board of the keyboard, by hitting any key a few times and pressing < RETURN> key twice, you can advance to the next check.

The next check is the beep function check in which you push any key other than < RETURN> key on the keyboard and confirm that a beep sounds each time you push a key. To exit this beep function check, hit < RETURN> key.

In the last check, the diagnostics checks interrupts generated from the keyboard. Push any key to interrupt.

Cation : If the input/output device is not conneted to the serial port CH.0, no output is provided. (The screen will be cleared.)

If any keyboard failure occurs, the keyboard unit or the serial port for keyboard may be at fault.

Description of the options

-o : oyayubi option

Append this option when you have connected the thumb shift keyboard NWP-410 in place of the NWP-411.

-us : us option

Append this option when you have connected the U.S. keyboard (NWP-411).

If either of these two options is not specified, the keyboard connected is regarded as the standard keyboard (NWP-411).

```
diag> keyboard -v
(The screen will be cleared.)
KEYBOARD CHECK:

        Push all keys   (for Exit, hit <RETURN> key 2 times)


        @@@@ @@@@ @@@@ @@@@ @@@@   @@@@ @@@@ @@@@ @@@@ @@@@
@@@@[1] [2] [3] [4] [5] [6] [7] [8] [9] [0] [-] [=] [\] @@@@  [7] [8] [9] [-]
@@@@ [Q] [W] [E] [R] [T] [Y] [U] [I] [O] [P] [[] []] @@@ @@@  [4] [5] [6] [+]
@@@@@ [A] [S] [D] [F] [G] [H] [J] [K] [L] [;] ['] [`] @@@@@@  [1] [2] [3] [,]
@@@@@@@ [Z] [X] [C] [V] [B] [N] [M] [,] [.] [/] [ ] @@@@@@@@  [0] @@@ [.] @@@
@@@@@ @@@ @@@@@ @@@@@@@@@@@@@@@@@@@@@@@@ @@@@@ @@@ @@@ @@@@@@  @@@ @@@ @@@ @@@


        Push any key to beep  (at End, hit <RETURN> key)


        Push any key to interrupt

                Interrupt check ..................... OK

diag>
```

Note : If the option "-o"is appended, a different layout will be displayed.

4-3-16. Mouse command

The "mouse" command is used to check the attached mouse.

The mouse button check displays a mouse picture on the screen. Pushing the three mouse buttons in turn will display the corresponding button locations in white-and-black reverse video. If the locations of these three buttons are displayed in white-and-black reverse video, it is confirmed that the mouse buttons function normally.

The mouse move check displays the X- and Y-coordinates and the mouse cursor on the screen. Move the mouse cursor up and down and to left and right. If the mouse cursor follows the mouse movement smoothly, the {X,Y} displacement data is normal.

In the last check, the diagnostics checks interrupts generated from the mouse. Push one of the mouse buttons or move the mouse to interrupt.

```
diag> mouse -v
(The screen will be cleared.)
MOUSE CHECK:

        Push all mouse buttons  (for Exit, hit <Del> key)
```

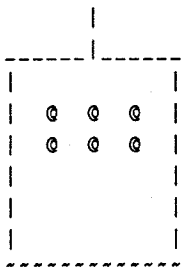

```
(The screen will be cleared.)
MOUSE CHECK:

        Move mouse cursor  (for Exit, Push any mouse button)
```

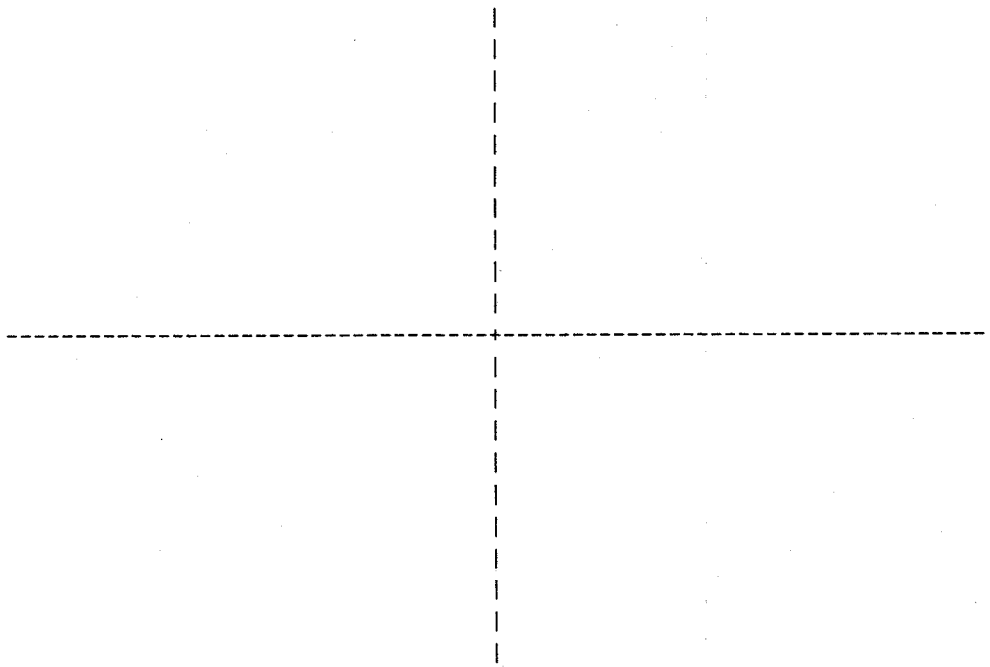

```
        Move mouse or push any mouse button to interrupt

                Interrupt check ..................... OK

diag>
```

If any mouse failure occurs, the mouse main body, the mouse circuit of the DA-9 board or the mouse serial port may be at fault.

4-3-17. LED Lamps command

The "led" command performs an illumination test for four LED indicator lamps on the main board and checks whether the result is good or not.

The diagnostics first checks the leftmost red LED lamp. When < RETURN> key is pressed, it causes the lamp to be lit and checks whether the read result is matched with the current status. Then it checks the second LED in the same manner as for the first LED. Thus, it checks all the four LED lamps.

```
diag> led -v
LED LAMPS CHECK:
        D1 LED LAMP ON :hit <RETURN> key
        D1 LED LAMP ..................................... OK
        D2 LED LAMP ON :hit <RETURN> key
        D2 LED LAMP ..................................... OK
        D3 LED LAMP ON :hit <RETURN> key
        D3 LED LAMP ..................................... OK
        D4 LED LAMP ON :hit <RETURN> key
        D4 LED LAMP ..................................... OK
        Hit <RETURN> key to NEXT
diag>
```

4-3-18. DIP Switch command

When the "dipsw" command is entered, set the sections of the DIP switch as instructed by messages on the screen and hit < RETURN> key to allow the diagnostics to check whether the DIP switch settings can be read correctly.

If "-#" option is set to have more than one check cycle, the status of the DIP switch is displayed on the screen each time you turn **ON/OFF** the DIP switch.

```
diag> dipsw -v
DIP-SWITCH CHECK [ 1 = ON / 0 = OFF ]:
        Set  DIP-SWITCH = 11111111      and hit <RETURN> key ... OK
        Set  DIP-SWITCH = 01111111      and hit <RETURN> key ... OK
        Set  DIP-SWITCH = 00111111      and hit <RETURN> key ... OK
        Set  DIP-SWITCH = 00011111      and hit <RETURN> key ... OK
        Set  DIP-SWITCH = 00001111      and hit <RETURN> key ... OK
        Set  DIP-SWITCH = 00000111      and hit <RETURN> key ... OK
        Set  DIP-SWITCH = 00000011      and hit <RETURN> key ... OK
        Set  DIP-SWITCH = 00000001      and hit <RETURN> key ... OK
        Set  DIP-SWITCH = 00000000      and hit <RETURN> key ... OK
Set DIP SWITCH as before [ 00000100 ] and hit <RETURN> key (*)
diag> !! -3
dipsw -v -3
DIP-SWITCH CHECK [ 1 = ON / 0 = OFF / X = DON'T CARE ]:
        Read DIP-SWITCH = 10000100 (**)
        Read DIP-SWITCH = 10100100 (**)
        Read DIP-SWITCH = 10000100 (**)
Set DIP SWITCH as before [ 00000100 ] and hit <RETURN> key (*)
diag>
```

4-3-19. Audio command

The "audio" command checks the audio interface incorporated in the system unit. Using a cable, connect the **MIC/SP BOX** to the **MIC/SP BOX** port at the rear panel. This audio interface check contains five tests :

The first test reads the contents of the ID register of the board mounted and checks whether the data is correct or not.

The second test checks FIFO memory on the audio interface for proper operation. This provides direct Read/Write/verify test from the CPU. as well as test using DMA transfer.

The third test is provided to check the D/A conversion function by writing triangle wave to FIFO memory and reproducing and sounding it from the **MIC/SP BOX** speaker.

The fourth test is provided to check the recording and playback function by inputting audio sound from the **MIC/SP BOX** microphone and checking whether the same sound is reproduced.

The last test is provided to check the ADPCM decoder and the electronics volume by reproducing sinusoidal wave having a curved line of volume twice from the **MIC/SP BOX**. In a stereo mode, the sound is heard from the left and right receivers in this order.

---

* Return the DIP switch to the original state before this check.

**The DIP switch turned ON/OFF. (The display depends the status.)

```
diag> audio -v
AUDIO CHECK:
        Controller ID ..............................  OK
        FIFO (program) .............................  OK
        FIFO (DMA) .................................  OK
        Triangle Wave ..............................  hit <RETURN> key
                Play Back ..........................  OK
        Record .....................................  hit <RETURN> key
                Record .............................  OK
        Play Back ..................................  hit <RETURN> key
                Play Back ..........................  OK
        ADPCM & VOLUME .............................  OK
diag>
```

4-3-20. Floppy Disk command

The "floppy" command checks the floppy disk drives. Executing this check requires one formatted floppy disk for each of 2DD and 2HD. These formatted 2DD and 2HD disks should be write protected. To format floppy disks, use the format option, ROM monitor command or OS format command.

The **Write protect** checks whether the write protection of the self diagnostics floppy disk set in the floppy disk drive can be detected.

Then the diagnostics checks the 2DD diskette (this must be formatted) and see if data can be read and written correctly (from and to randomly selected 100 sectors).

Then the program checks the 2DD diskette (this must be formatted) and see if data can be read and written correctly (from and to randomly selected 100 sectors).
Replace the floppy disk according to the message displayed.

Description of the options

-a : all sector option

Provides checks on all sectors rather than on randomly selected 100 sectors.

-dd : 2dd option

Only checks 2DD floppy disk.

-hd : 2hd option

Only checks 2HD floppy disk.

-f : format option

Formats the floppy disk. This option will be ignored unless it is used with the option "-dd" or "-hd".

Example : -f -dd (to format 2DD floppy disk)
Example : -f -hd (to format 2HD floppy disk)

-t# : retry count option

Specifies how many times a retry is made if any error occurs. If this is omitted, the retry count is 10.

Example : -t3 (to set the retry count to 3)

-d# : drive number (# = 1,2,3,4)

If this option is not specified, the drive number is regarded as "1" (internal 3.5" drive). To check an external floppy disk drive, specify the dive number (2, 3 or 4). A drive with a drive number of 2, 3 or 4 is treated as **5.25" MS-DOS format.**

(If this option is appended, the MS-DOS format is provided for formatting.)

Example : -d3 (to specify the drive number "3")
Note : The floppy disk drive number is usually counted from 1.

-mws : news option

Although a drive with a drive number of 2, 3 or 4 is treated as 5.25" MS-DOS format, this option can be used with the drive number option to have an external drive treated as **3.5" NEWS format.**
Example : -d2 -nws (to specify the drive number "2" and 3.5" NEWS format)

```
diag> floppy -v
FLOPPY DISK CHECK:
        Write protect ............................. OK
        Set 2DD Floppydisk and hit <RETURN> key
                Write some data ................... OK
                Verify the data ................... OK
        Set 2HD Floppydisk and hit <RETURN> key
                Write some data ................... OK
                Verify the data ................... OK
        Set DIAG Floppydisk and hit <RETURN> key
diag> !! -f -hd
floppy -v -f -hd
FLOPPY DISK CHECK:
        Set 2HD Floppydisk for format and hit <RETURN> key
                Format the disk ................... OK
                Verify the disk ................... OK
diag>
```

4-3-21. ROM monitor command

The "mon" command is used to change from the self diagnostic mode to the ROM monitor.

```
diag> mon
EXIT Diagnostic mode
```

4-3-22. Power off command

Issuing the "off"" command turns OFF the system unit.

```
diag> off

Good bye!
```

4-3-23. Display menu command

Issuing the "menu" command displays the self tests available in the self diagnostics.

4-3-24. Check All command

The "all" command performs all the commands described above in turn.

All options other than "-#" are passed to the individual commands by which only the corresponding options are interpreted.

Description of the option

-# : times option

If "-#" option is appended to the check all command (# is a number of 2 or more), the commands described in Sections 4-3-1. to 4-3-11. will be performed in turn by # cycles. If this option is omitted, the commands described in Sections 4-3-1 to 4-3-19 will be sequentially performed once.

-N : execute Number option

Following "-N", provide a list of the command numbers (displayed on the menu) separated from each other by a comma "," to execute the corresponding commands sequentially. If "+" is specified as a separator in place of ",", the system executes the commands from the number before "+" to the number after "+" in an ascending sequential order.

Example : -N2,3,5,7,9 (to execute commands No. 2,3,5,7,9 in this order)

Example : -N2+4,7+9,19 (to execute commands No. 2,3,4,7,8,9,19 in this order)

Caution : The command numbers 0, 20, 21, and 22 cannot be selected.

Attachment A - Jig for SERIAL Port

This attachment describes the jig attached to the **SERIAL** port (CH.0/CH.1), and the jig attached to the 4ch serial interface board (optional SERIAL port) when performing the self diagnosis on the serial lines of the network workstation **NEWS**.

1) Pin assignments of the SERIAL port

Pin No.	Signal	Input/output direction	Pin No.	Signal	Input/output direction
1	–		14	–	
2	TxD	→	15	TRxD	
3	RxD	←	16	–	
4	RTS	→	17	RTxC	
5	CTS	←	18	–	
6	DSR	→	19	–	
7	GND		20	DTR	←
8	DCD	←	21	–	
9	–		22	RI	←
10	–		23	–	
11	–		24	–	
12	–		25	–	
13	–				

SERIAL port on the main unit (CH.0/CH.1)

Pin No.	Signal	Input/output direction	Pin No.	Signal	Input/output direction
1	–	←	6	DSR	→
2	TxD	←	7	RTS	→
3	RxD	→	8	CTS	←
4	RTS	←	9	RI	←
5	CTS		10		

Optional SERIAL port (CH.0 -CH.3)

→ : Input signal

← : Output signal

2) Wiring of the jig attached to the SERIAL port

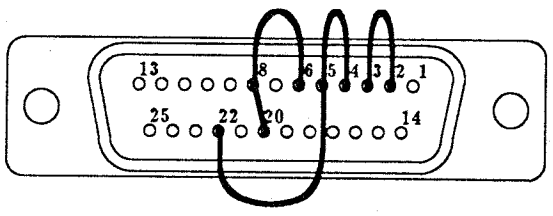

SERIAL port on the system unit (CH.0/CH.1)

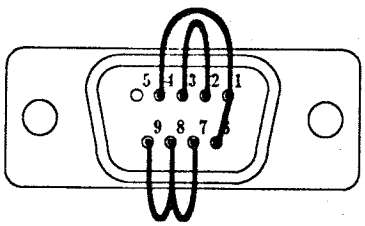

Optional SERIAL port (CH.0 - CH.3)

The connector used for the jig is the DD-SUB socket (female).

Attachment B - Jig for PARALLEL Port

This attachment describes the jig attached to the **PARALLEL** port when performing the self diagnosis on the parallel port.

1) Pin assignments of the PARALLEL port

Pin No.	Signal	Input/output direction	Pin No.	Signal	Input/output direction
1	CSTRB	→	8	CENT D6	→
2	CENT D0	→	9	CENT D7	→
3	CENT D1	→	10	–	
4	CENT D2	→	11	C busy	←
5	CENT D3	→	12	–	
6	CENT D4	→	13	C fault	←
7	CENT D5	→	14	GND	

→ : Input signal

← : Output signal

2) Wiring of the jig attached to the PARALLEL port

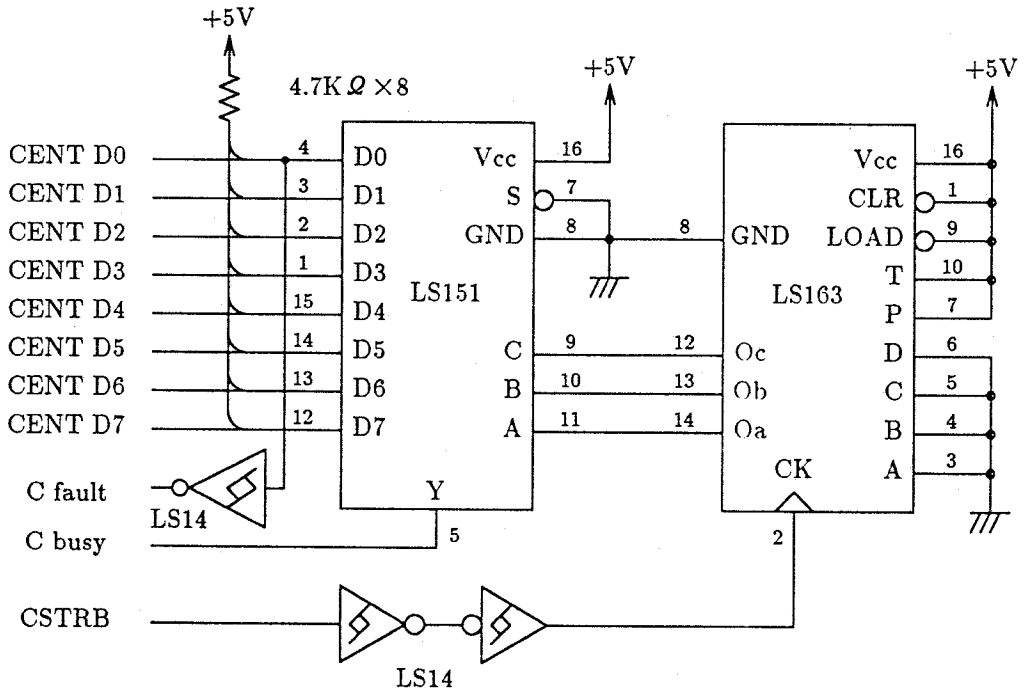

(7-Pin : GND/ 14-Pin : +5V)

CHAPTER 5
TROUBLESHOOTING

5-1. TROUBLESHOOTING USING LED DISPLAY FOR DEBUGGING

The LED display for debugging on the MPU board will display results of tests when the ROM monitor is booted (by illumination or blinking).
Troubleshoot the peripheral circuits on referring to this display.

(a) LED = 0001 (only the least significant bit lit)
(b) Check sum of ROM. If error is detected, go to (z).
(c) LED = 0010
(d) Make memory test of RTC (byte access). If error is detected, go to (z).
(e) LED = 0011
(f) Make memory test of RTC (hard word access). If error is detected, go to (z).
(g) LED = 0100
(h) Make memory test of RTC (long word access). If error is detected, go to (z).
(i) LED = 0101
(j) Read DIP switch port
(k) LED = 0110
(l) Flash cache
(m) LED = 0111
(n) Jump to cache space (start to run on 1-cache)
(o) LED = 1000
(p) Clear RTC memory (monitor variable areas)
(q) LED = 1001
(r) Test ROM areas of main memory (use ether buffer in non-memory mode) If error is detected, go to (z).
(s) LED = 1010
(t) Initialize console and others and output message
(u) LED = 0000 (all off)
. . . . . .
ROM monitor is booted normally.

If error is detected :
(z) Blink permanently while remaining the contents of the LED display.

5-2. TROUBLESHOOTING IN NO MAIN MEMORY MODE

Usually, the ROM monitor uses main memory. But if it may not be used for some reason, you can boot the ROM monitor by entering the No main memory mode. The monitor will be operated using the RAM of the RTC. In this mode, the system will first check main memory and its peripherals. If they operates normally, the system will then boot up the ROM monitor.
Note that the functions available are very limited in this mode and so this mode is chiefly used for main memory check.

How to boot the ROM monitor in the No main memory mode :
Turn on Bit 7 of the DIP switch.

5-3. TROUBLESHOOTING UPON POWER ON

The program is responsible for the power on sequence of this computer. In the event that certain failures occur, therefore, there is a possibility that the power won't be turned on. This section describes possible reasons why the power won't be turned on if it occurs.
Also, refer to the timing chart (Page 3-18).

5-3-1. SYSOUT* failures

All operations from reset and clear to power on are performed basically by the clock signal SYSOUT *. This signal is generated by the CPU from the double-clock signal. If the CPU is not operating normally, the SYSOUT* may not be output, which will suppress PARK2 from operating as usual. There are many possible reasons for this. First, it is suspected that the INT (5 : 0) lines may not be correctly connected to the CUP. To ensure that the CPU operates normally, the INT lines 4,5 must be kept LOW during the reset period. Second, since the CPU compromises FPU and PLL, it is suspected that the interface of CPU to the FPU and PLL may not be good, which could prevent the SYSOUT* from be normally output.

5-3-2. System ROM interface failures

The mode select operations of the CPU are carried out using data in system ROM. This data in the ROM is stored in PARK2 once and then it is sent to the CPU. Therefore, if the data in the ROM is not sent properly, the CPU cannot be basically initialized, which does not allow program run.

5-3-3. MEMWR failures

There might be cases in which the system operates according to the timing chart but the power won't be turned on. This situation could be explained by no MEMWR signal output of the CPU, which does not allow all writes to memory and I/O devices including writes to the power on board. There are a number of possible reasons which are poor soldering, poor mounting of CPU, faulty CPU, etc.

5-3-3. MEMWR failures

There might be cases in which the system operates according to the timing chart but the power won't be turned on. This situation could be explained by no MEMWR signal output of the CPU, which does not allow all writes to memory and I/O devices including writes to the power on board. There are a number of possible reasons which are poor soldering, poor mounting of CPU, faulty CPU, etc.

6-7. DA-4 BOARD

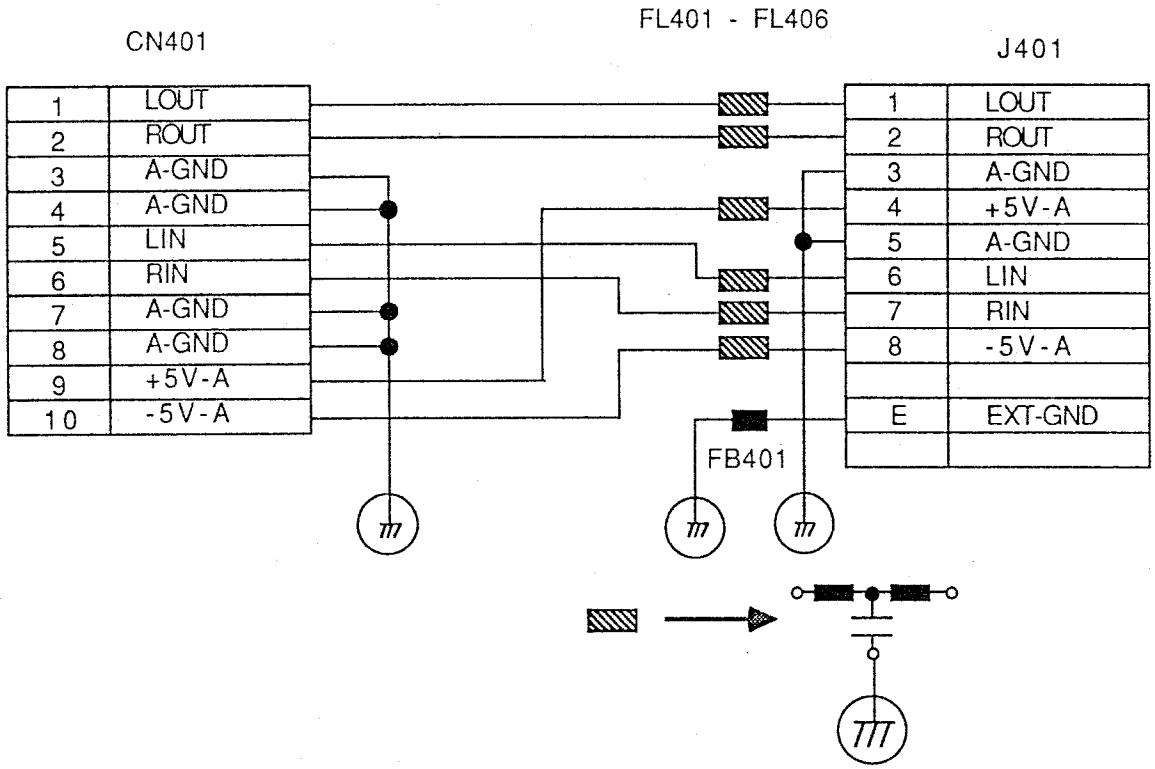
CN401
FL401 - FL406
J401
1 LOUT
2 ROUT
3 A-GND
4 A-GND
5 LIN
6 RIN
7 A-GND
8 A-GND
9 +5V-A
10 -5V-A
1 LOUT
2 ROUT
3 A-GND
4 +5V-A
5 A-GND
6 LIN
7 RIN
8 -5V-A
E EXT-GND
FB401

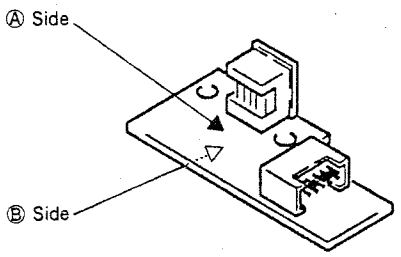
Ⓐ Side
Ⓑ Side

— Ⓐ Side —

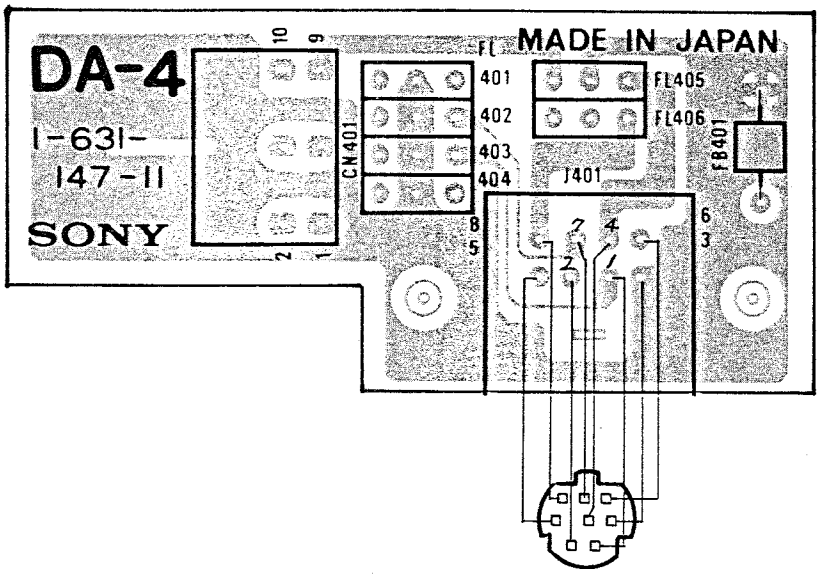
DA-4
1-631-
147-11
SONY
MADE IN JAPAN
FL
401
402
403
404
FL405
FL406
FB401
CN401
J401
10
9
2
1
8
5
6
3

— Ⓑ Side —

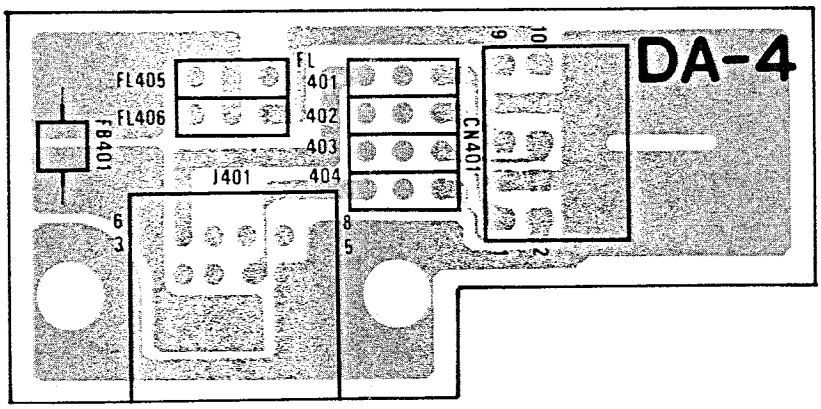
DA-4
FL
401
402
403
404
FL405
FL406
FB401
CN401
J401
9
10
2
1
8
5
6
3

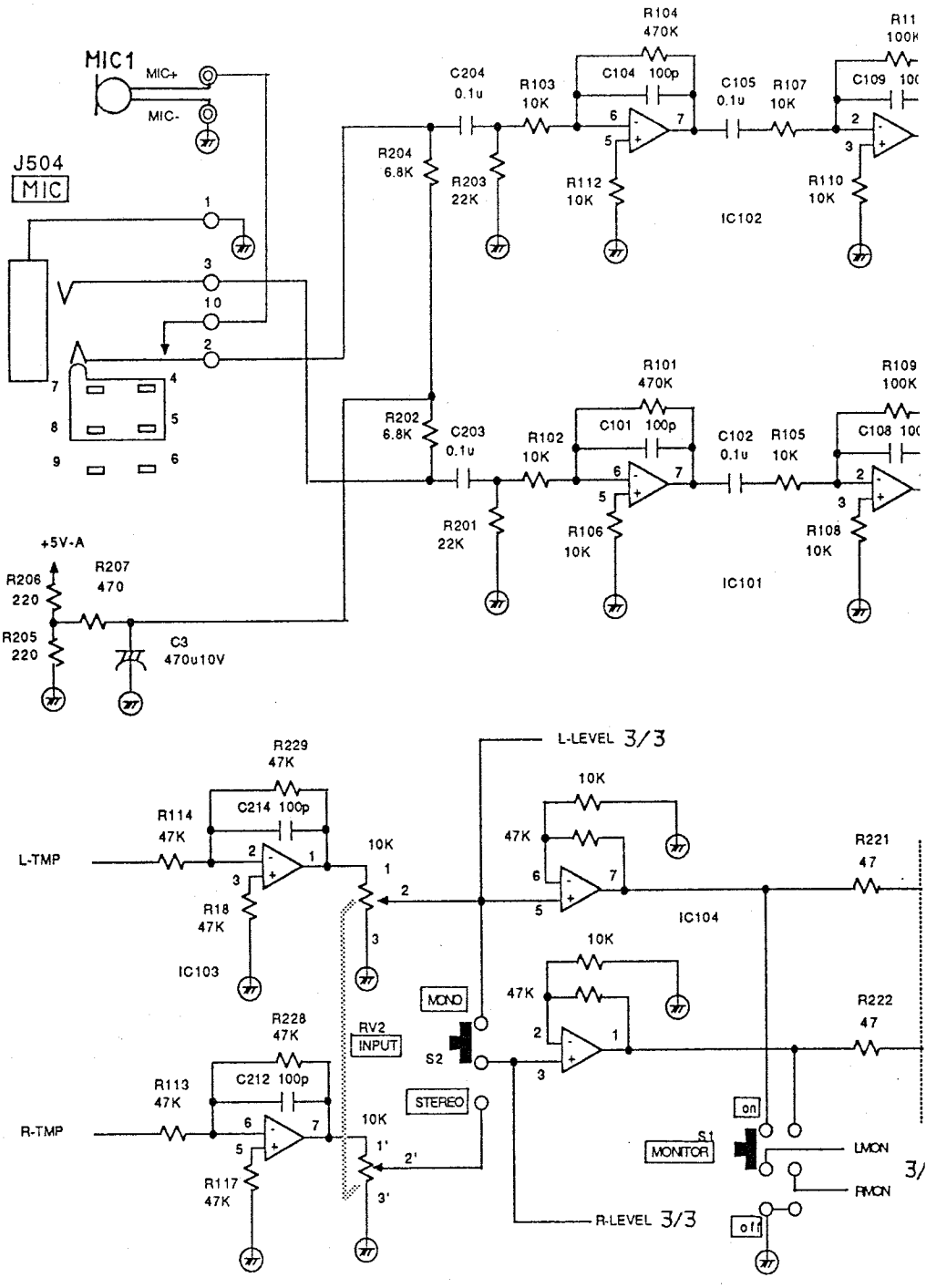
MIC1
MIC+
MIC-
J504
MIC
+5V-A
R206
220
R207
470
R205
220
C3
470u10V
R204
6.8K
C204
0.1u
R103
10K
R104
470K
C104 100p
C105
0.1u
R107
10K
R112
10K
R110
10K
IC102
R202
6.8K
C203
0.1u
R102
10K
R101
470K
C101 100p
C102
0.1u
R105
10K
R201
22K
R106
10K
R108
10K
IC101
L-LEVEL 3/3
R229
47K
C214 100p
R114
47K
L-TMP
R18
47K
IC103
10K
R221
47
IC104
R228
47K
C212 100p
R113
47K
R-TMP
R117
47K
RV2
INPUT
MONO
S2
STEREO
R222
47
S1
MONITOR
on
off
LMON
RMON
R-LEVEL 3/3

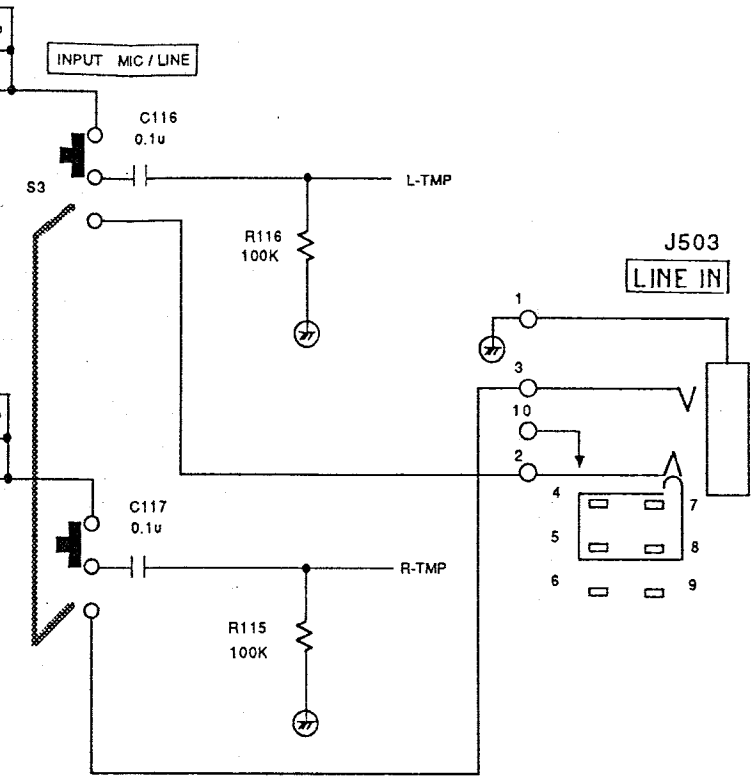
INPUT MIC / LINE
C116
0.1u
S3
L-TMP
R116
100K
J503
LINE IN
1
3
10
2
4
5
6
7
8
9
C117
0.1u
R-TMP
R115
100K

J501

LIN

RIN

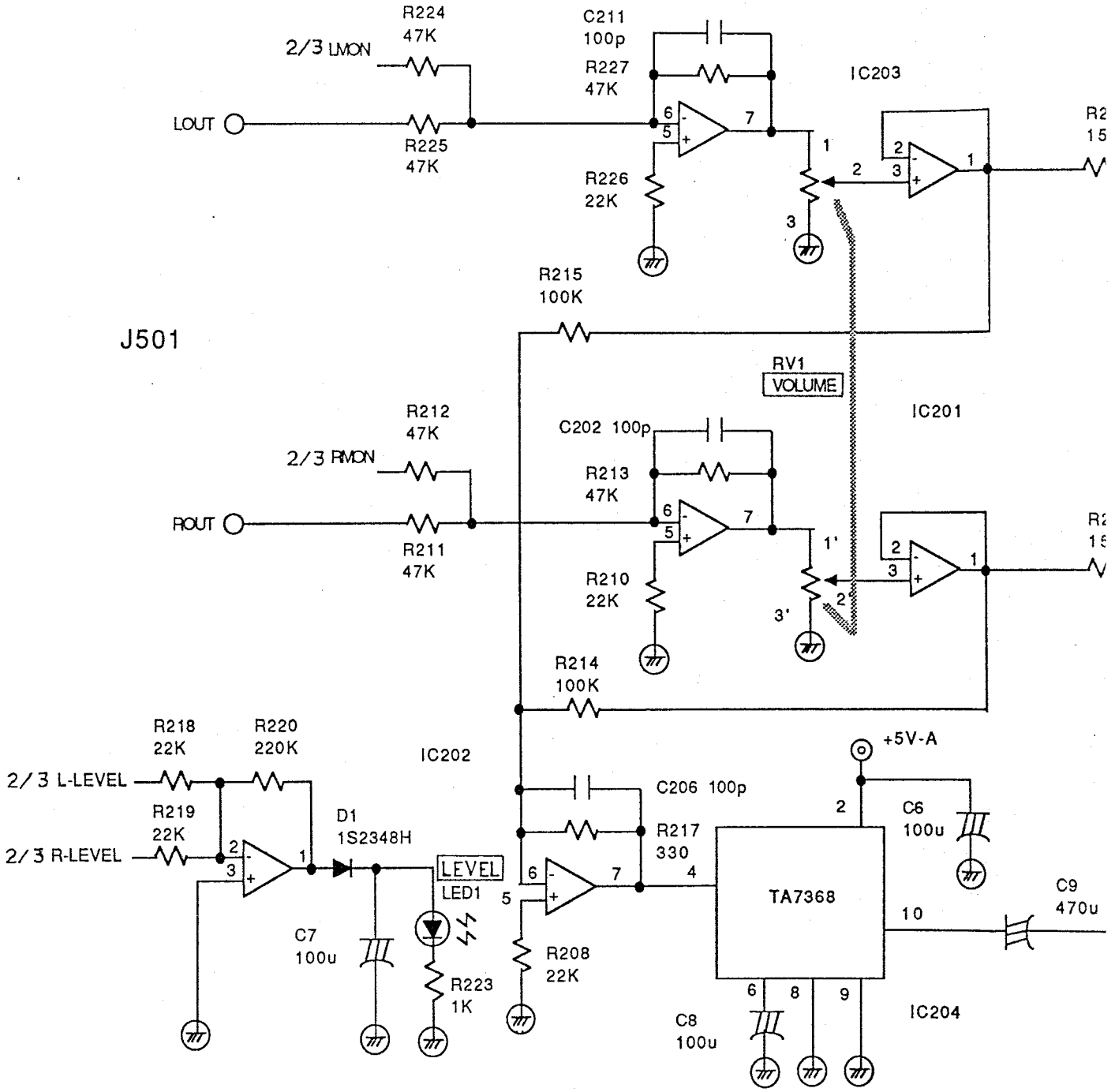
R224
47K
2/3 LMON
C211
100p
R227
47K
IC203
LOUT
R225
47K
R226
22K
R215
100K
J501
RV1
VOLUME
IC201
R212
47K
C202 100p
2/3 RMON
R213
47K
ROUT
R211
47K
R210
22K
R214
100K
R218
22K
R220
220K
IC202
2/3 L-LEVEL
R219
22K
2/3 R-LEVEL
D1
1S2348H
LEVEL
LED1
C206 100p
R217
330
+5V-A
C6
100u
TA7368
C9
470u
C7
100u
R223
1K
R208
22K
C8
100u
IC204

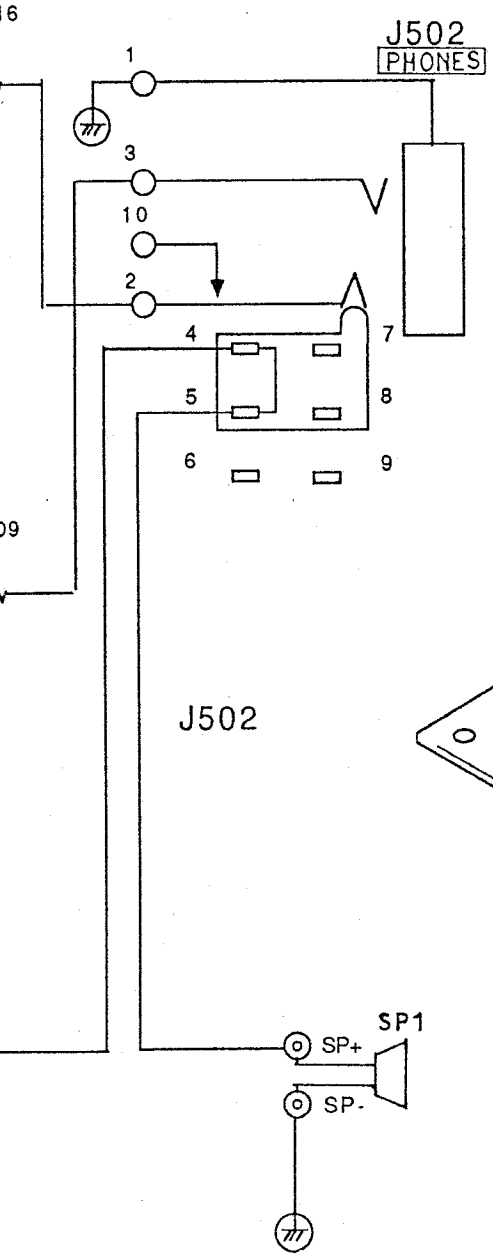
J502
PHONES
1
3
10
2
4
7
5
8
6
9
J502
SP1
SP+
SP-

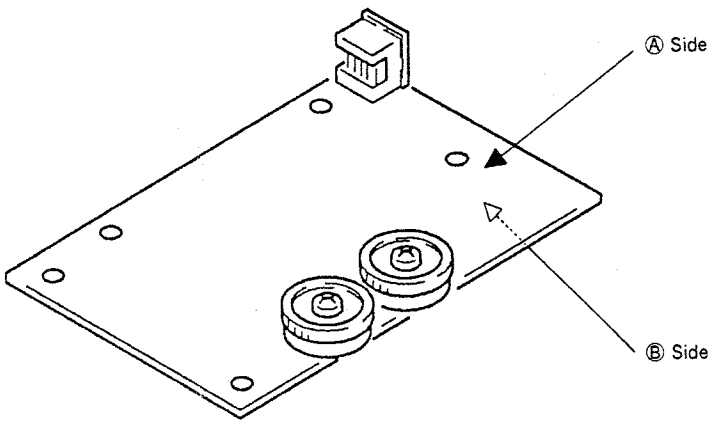
Ⓐ Side
Ⓑ Side

— Ⓐ Side —

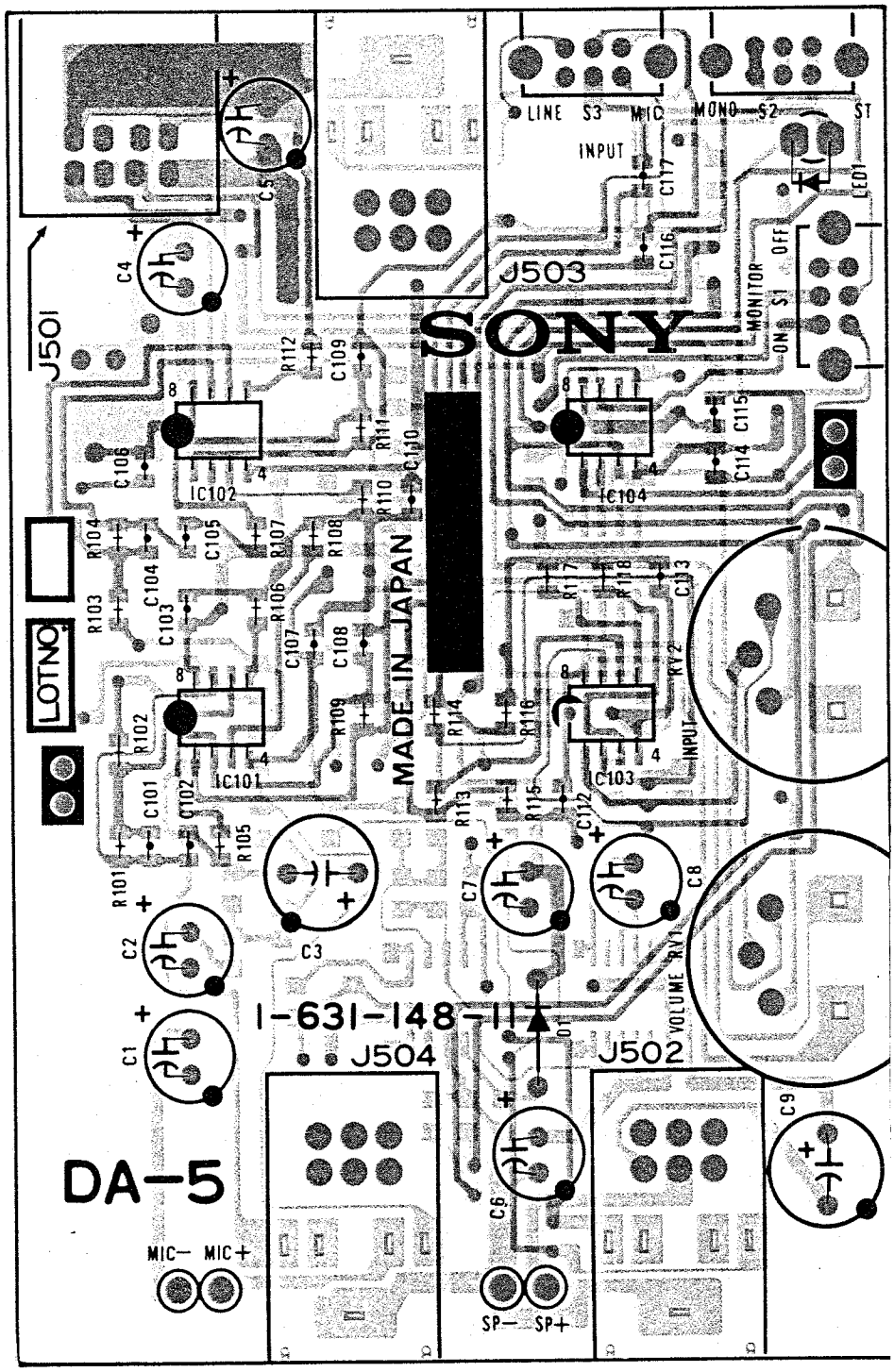

Note :

- ▓▓ : Pattern on the side which is seen.
- ▒▒ : Pattern of the rear side.

— Ⓑ Side —

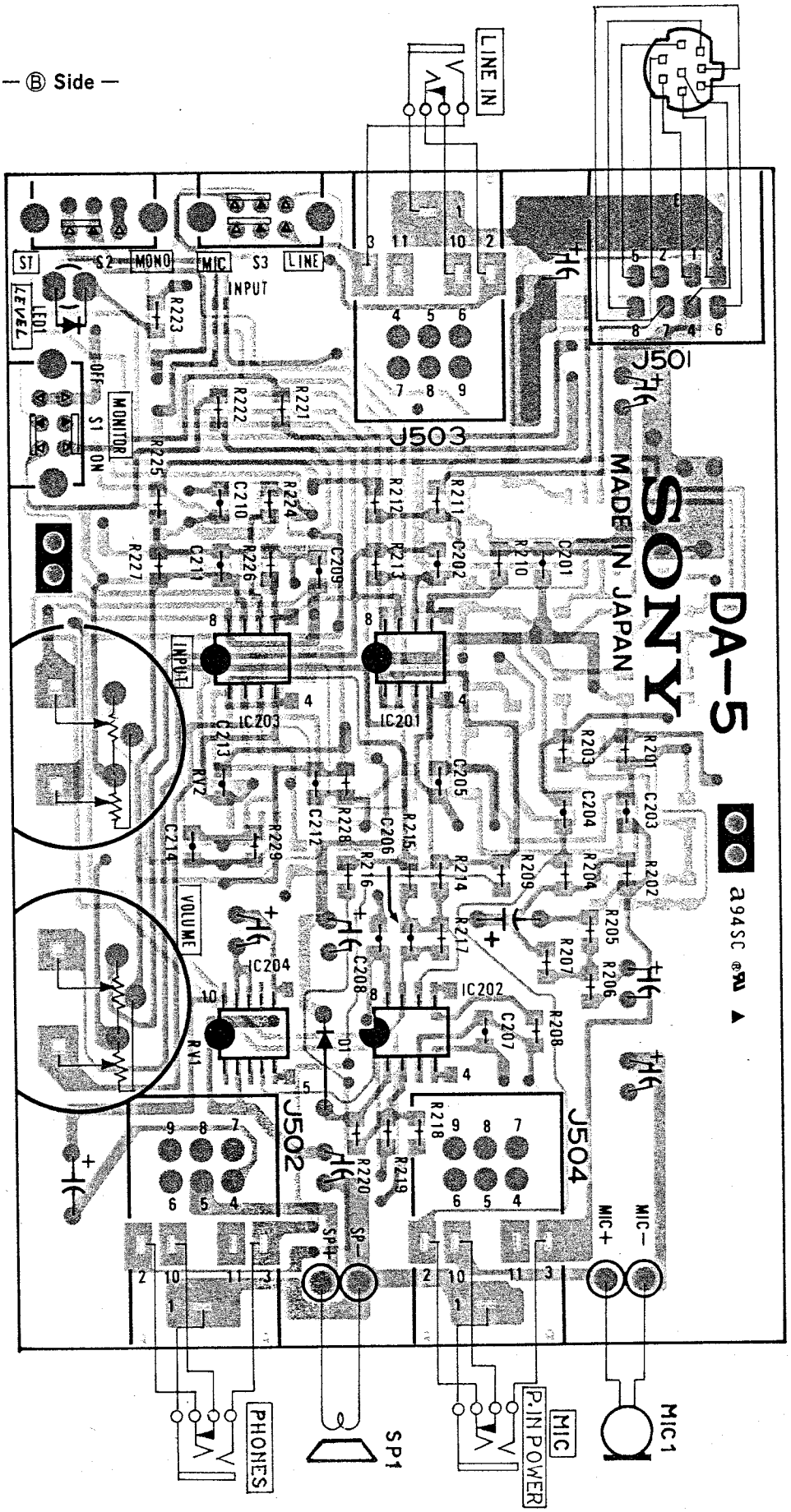
LINE IN
J501
J503
J502
J504
ST
S2
MONO
MIC
S3
LINE
INPUT
LEVEL
LED1
OFF
S1
ON
MONITOR
SONY
DA-5
MADE IN JAPAN
IC201
IC202
IC203
IC204
INPUT1
VOLUME
RV1
RV2
D1
SP+
SP−
MIC+
MIC−
PHONES
SP1
MIC
P.IN POWER
MIC1

6-9. DA-7 BOARD

CN701

1	D-GND	2	D-GND
3	ADD0	4	$\overline{DSB}$
5	ADD1	6	N.C.
7	ADD2	8	N.C.
9	ADD3	10	AUDREQ
11	ADD4	12	$\overline{AUDRD}$
13	ADD5	14	$\overline{AUDWR}$
15	ADD6	16	AUDEOP
17	ADD7	18	D-GND
19	D-GND	20	+5V
21	IOA0	22	+5V
23	IOA1	24	+5V
25	IOA2	26	+5V
27	D-GND	28	D-GND
29	$\overline{IPIRQ1}$	30	+12V
31	N.C.	32	+12V
33	$\overline{RESET}$	34	-12V
35	$\overline{AUDCS}$	36	D-GND
37	$\overline{AUDACK}$	38	RWIB
39	D-GND	40	D-GND

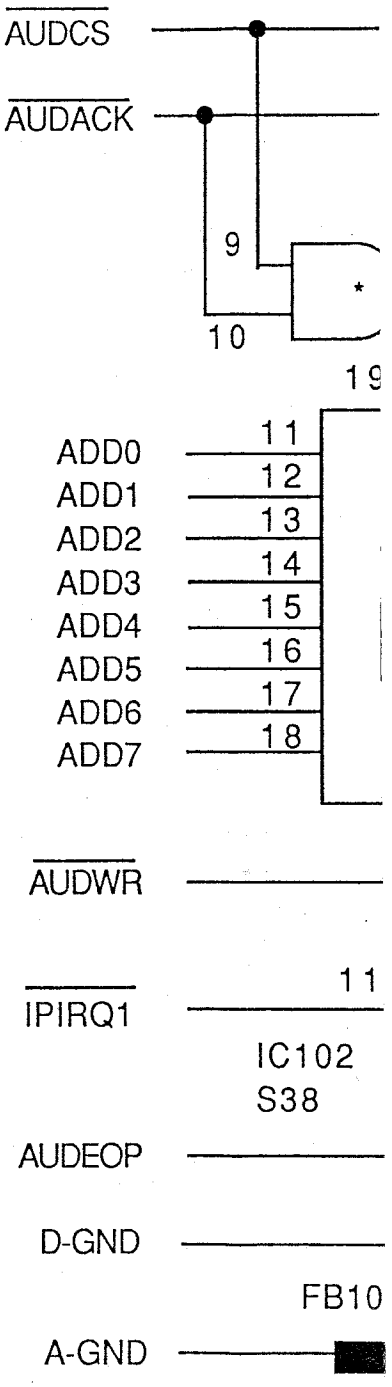

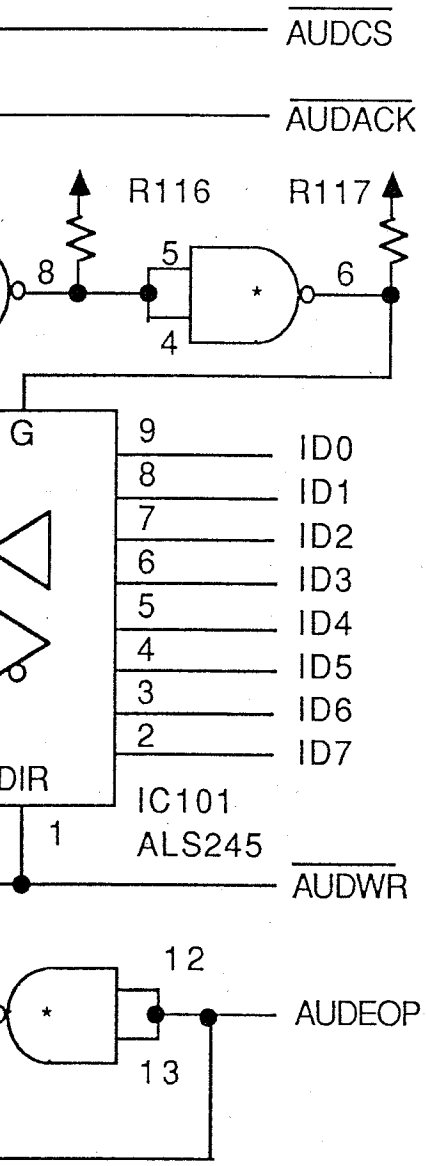
AUDCS
AUDACK
R116
R117
8
5
6
4
G
9
8
7
6
5
4
3
2
ID0
ID1
ID2
ID3
ID4
ID5
ID6
ID7
DIR
IC101
ALS245
1
AUDWR
12
13
AUDEOP

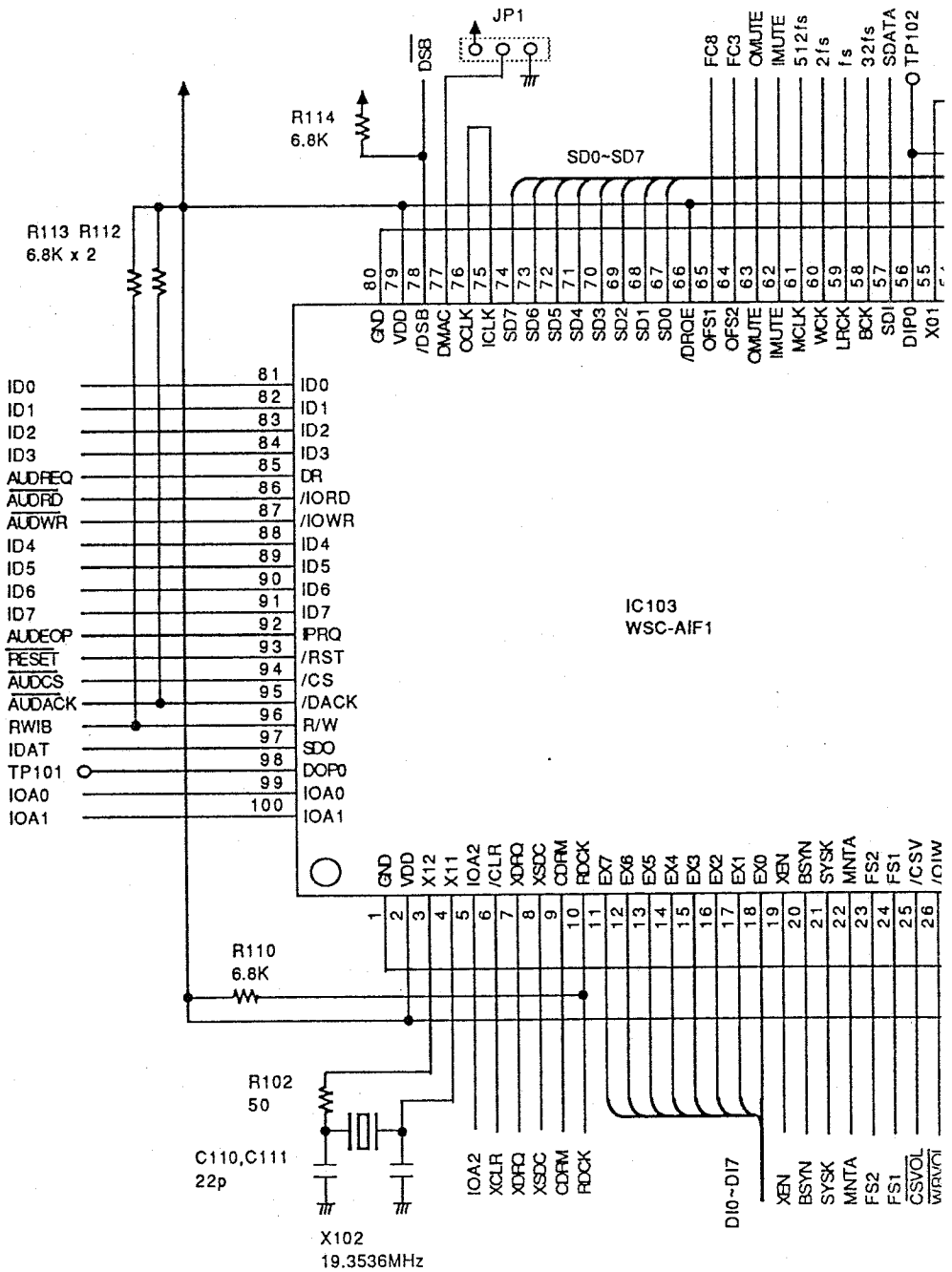
JP1
DSB
R114
6.8K
SD0~SD7
R113 R112
6.8K x 2
FC8
FC3
CMUTE
IMUTE
512fs
2fs
fs
32fs
SDATA
TP102
GND
VDD
/DSB
DMAC
CCLK
ICLK
SD7
SD6
SD5
SD4
SD3
SD2
SD1
SD0
/DROE
OFS1
OFS2
CMUTE
IMUTE
MCLK
WCK
LRCK
BCK
SDI
DIP0
X01
ID0
ID1
ID2
ID3
AUDREQ
AUDRD
AUDWR
ID4
ID5
ID6
ID7
AUDEOP
RESET
AUDCS
AUDACK
RWIB
IDAT
TP101
IOA0
IOA1
DR
/IORD
/IOWR
/IPRQ
/RST
/CS
/DACK
R/W
SDO
DOP0
IC103
WSC-AIF1
GND
VDD
X12
X11
IOA2
/CLR
XDRQ
XSDC
CDRM
RDCK
EX7
EX6
EX5
EX4
EX3
EX2
EX1
EX0
XEN
BSYN
SYSK
MNTA
FS2
FS1
/CSV
R110
6.8K
R102
50
C110,C111
22p
X102
19.3536MHz
DI0~DI7

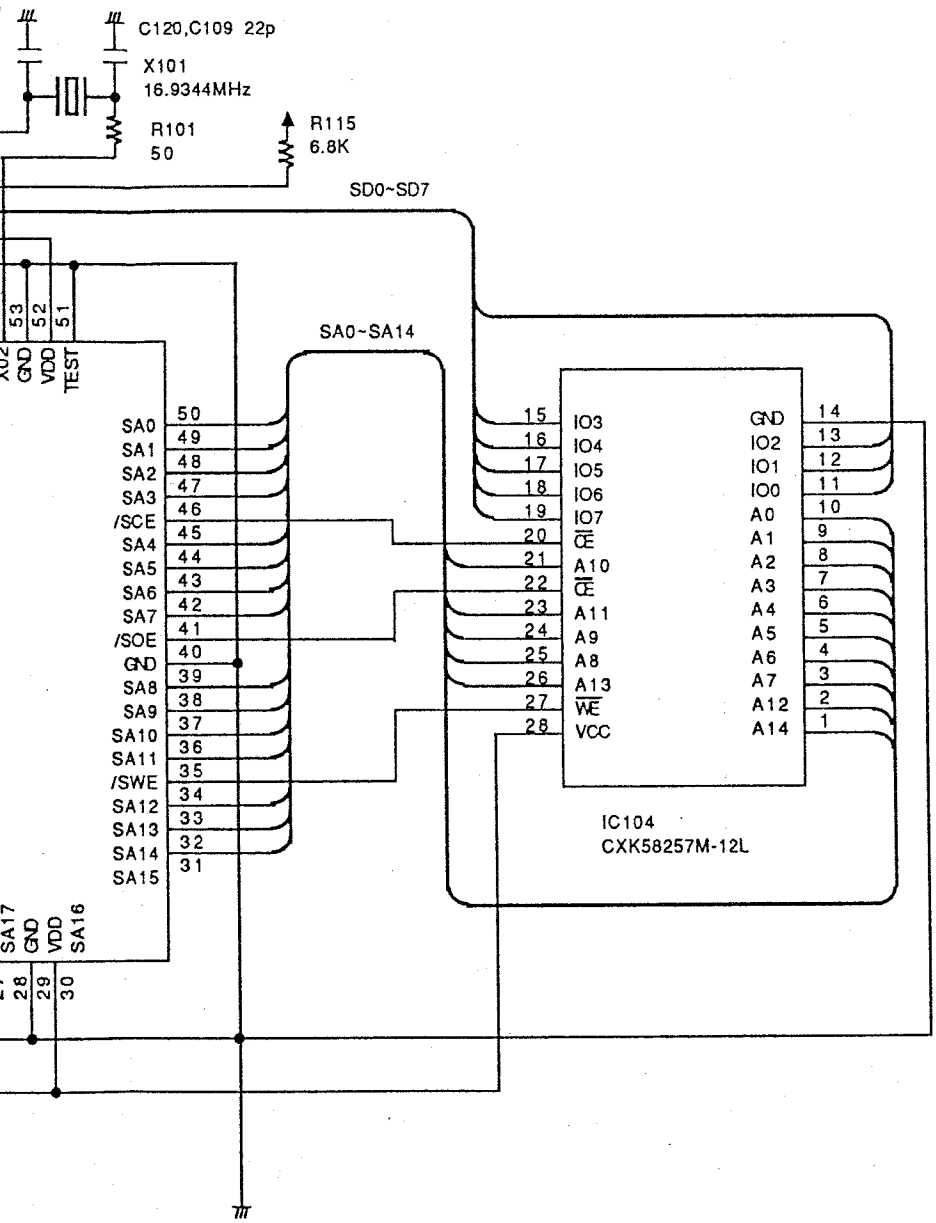
C120,C109 22p
X101
16.9344MHz
R101
50
R115
6.8K
SD0~SD7
SA0~SA14
53
52
51
GND
VDD
TEST
SA0 50
SA1 49
SA2 48
SA3 47
/SCE 46
SA4 45
SA5 44
SA6 43
SA7 42
/SOE 41
GND 40
SA8 39
SA9 38
SA10 37
SA11 36
/SWE 35
SA12 34
SA13 33
SA14 32
SA15 31
SA17 28
GND
VDD 29
SA16 30
15 IO3
16 IO4
17 IO5
18 IO6
19 IO7
20 OE
21 A10
22 CE
23 A11
24 A9
25 A8
26 A13
27 WE
28 VCC
GND 14
IO2 13
IO1 12
IO0 11
A0 10
A1 9
A2 8
A3 7
A4 6
A5 5
A6 4
A7 3
A12 2
A14 1
IC104
CXK58257M-12L

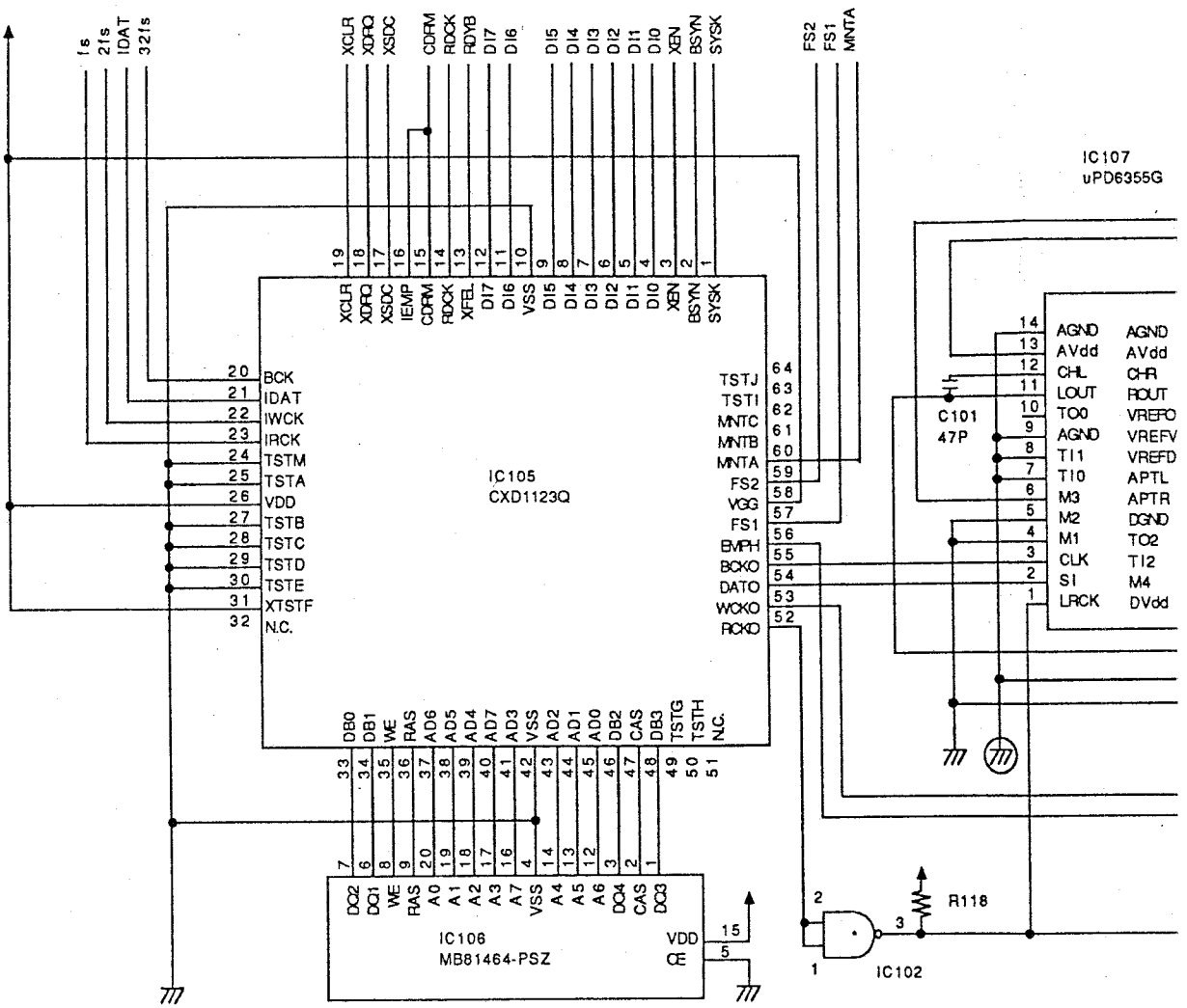
IC105
CXD1123Q
IC106
MB81464-PSZ
IC107
uPD6355G
IC102
C101
47P
R118
BCK
IDAT
IWCK
IRCK
TSTM
TSTA
VDD
TSTB
TSTC
TSTD
TSTE
XTSTF
N.C.
XCLR
XDRQ
XSDC
IEMP
CDFM
RDCK
XFBL
DI7
DI6
VSS
DI5
DI4
DI3
DI2
DI1
DI0
XEN
BSYN
SYSK
TSTJ
TSTI
MNTC
MNTB
MNTA
FS2
VGG
FS1
EMPH
BCKO
DATO
WCKO
RCKO
AGND
AVdd
CHL
LOUT
TO0
AGND
TI1
TI0
M3
M2
M1
CLK
SI
LRCK
CHR
ROUT
VREFO
VREFV
VREFD
APTL
APTR
DGND
TO2
TI2
M4
DVdd

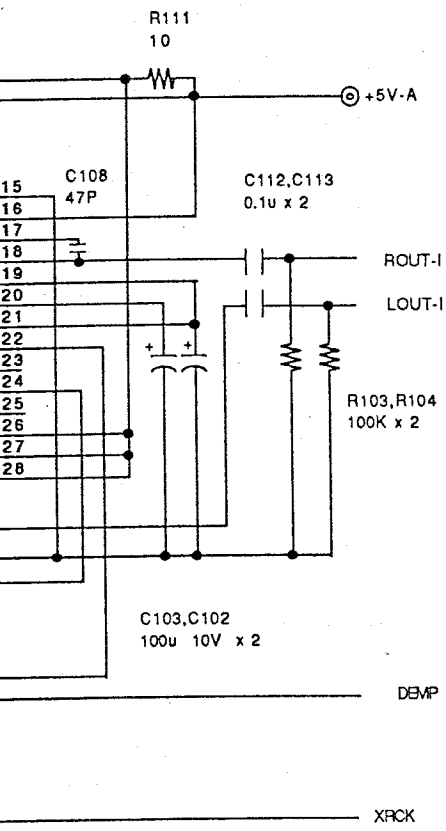
R111
10
+5V-A
C108
47P
C112,C113
0.1u x 2
15
16
17
18
19
20
21
22
23
24
25
26
27
28
ROUT-I
LOUT-I
R103,R104
100K x 2
C103,C102
100u 10V x 2
DEMP
XRCK

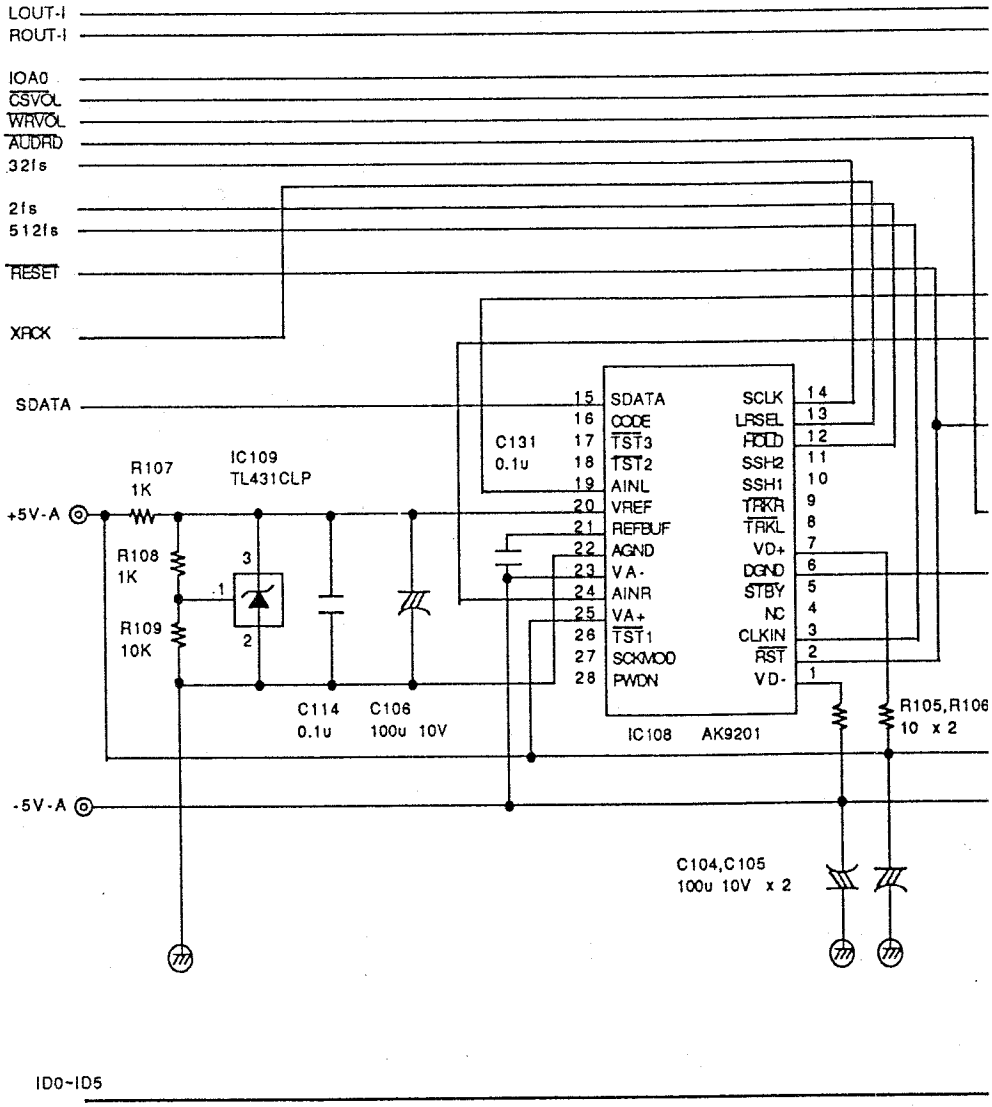
LOUT-I
ROUT-I
IOA0
CSVOL
WRVOL
AUDRD
32fs
2fs
512fs
RESET
XRCK
SDATA
+5V-A
-5V-A
R107
1K
IC109
TL431CLP
R108
1K
R109
10K
C131
0.1u
C114
0.1u
C106
100u 10V
IC108 AK9201
15 SDATA
16 CODE
17 TST3
18 TST2
19 AINL
20 VREF
21 REFBUF
22 AGND
23 VA-
24 AINR
25 VA+
26 TST1
27 SCKMOD
28 PWDN
SCLK 14
LRSEL 13
ADLD 12
SSH2 11
SSH1 10
TRKR 9
TRKL 8
VD+ 7
DGND 6
STBY 5
NC 4
CLKIN 3
RST 2
VD- 1
R105,R106
10 x 2
C104,C105
100u 10V x 2
ID0~ID5

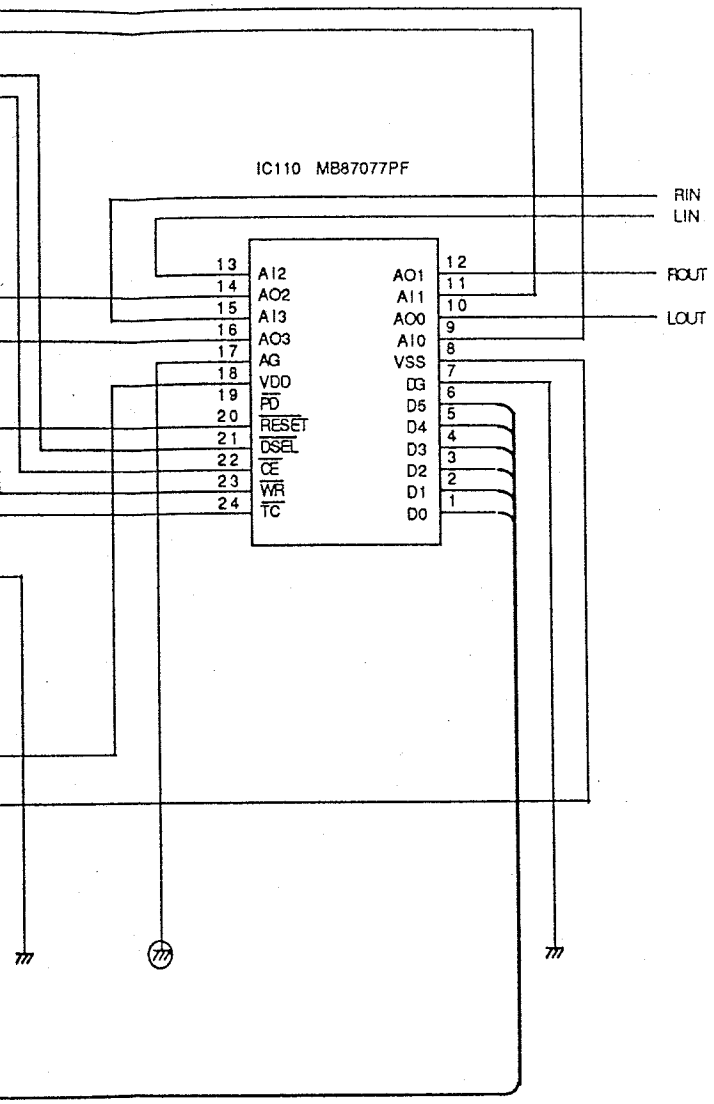
IC110 MB87077PF
RIN
LIN
ROUT
LOUT
13 AI2
14 AO2
15 AI3
16 AO3
17 AG
18 VDD
19 PD
20 RESET
21 DSEL
22 CE
23 WR
24 TC
AO1 12
AI1 11
AO0 10
AI0 9
VSS 8
DG 7
D5 6
D4 5
D3 4
D2 3
D1 2
D0 1

— Ⓐ Side —

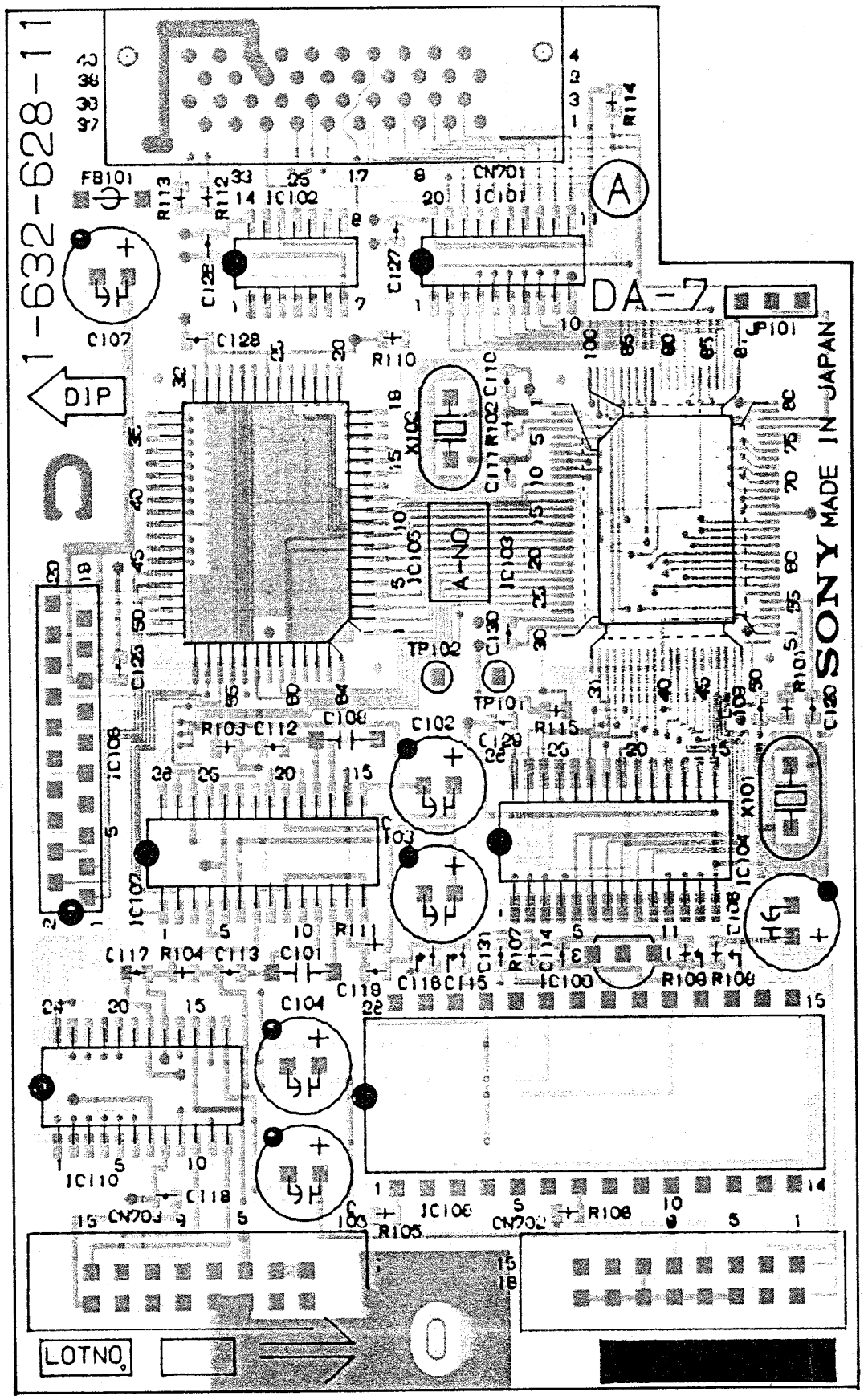
1-632-628-11
DA-7
SONY MADE IN JAPAN
DIP
LOTNO
A-NO
FB101
CN701
JP101
TP102
TP101
IC102
IC101
IC105
IC103
IC107
IC104
IC110
IC106
CN703
CN702
R110
R111
R115
R103
R104
R105
R106
R108
R109
R114
C107
C128
C127
C102
C104
C101
C113
C117
C118
C120
C125
C130
C131
C114
C115
C116
C108
C109
C112
C129
C130
C131
X101
X102
C111
C110
R102
R107
R101
R113
R112

Note :
- : Pattern on the side which is seen.
- : Pattern of the rear side.

— Ⓑ Side —

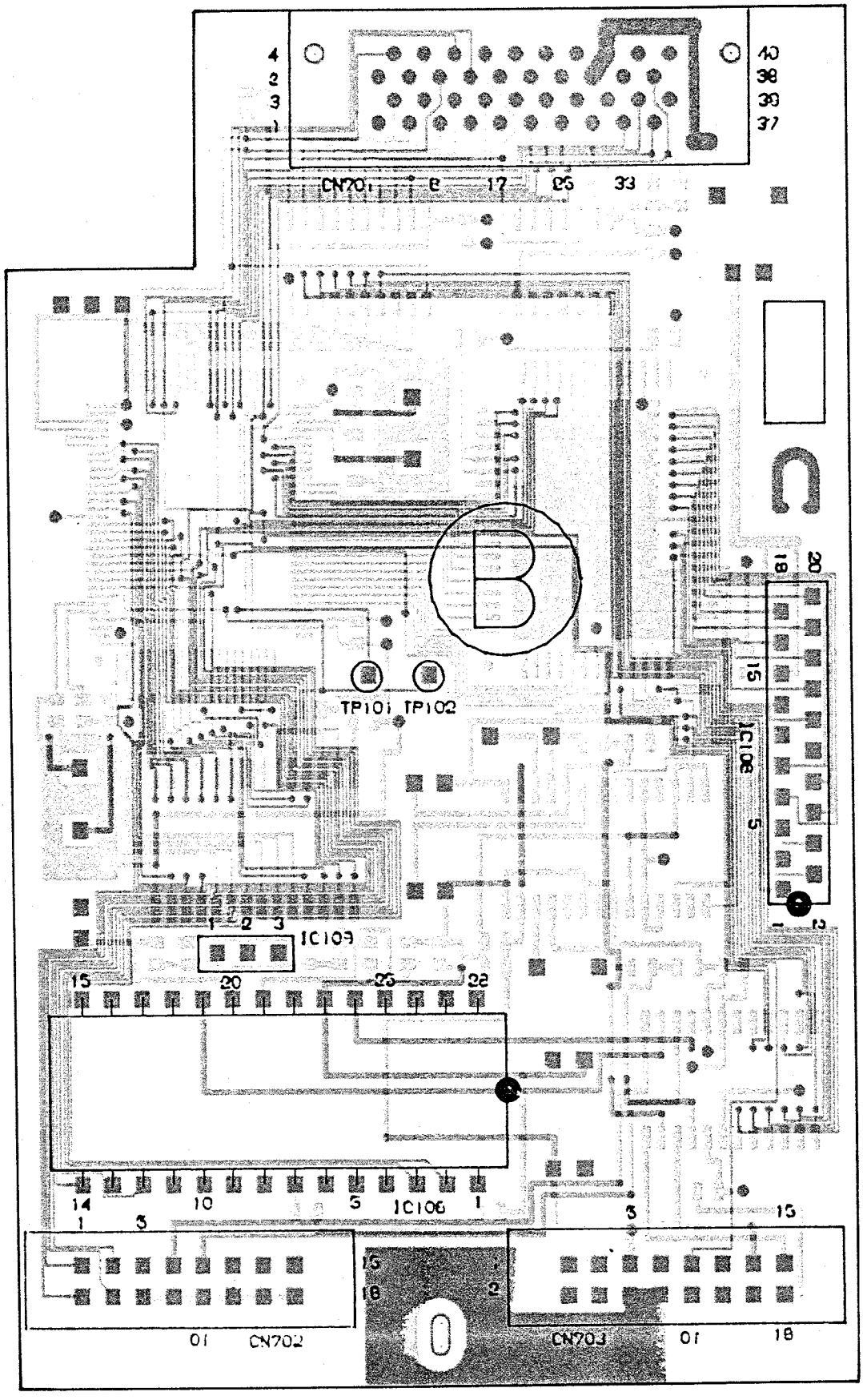

6-10. DA-8 BOARD

CN301

1	LOUT-C	2	ROUT-C
3	A-GND	4	A-GND
5	LIN-C	6	RIN-C
7	A-GND	8	A-GND
9	+5V-EXT	10	-5V-EXT

CN302

1	FC8	2	FC3
3	OMUTE	4	IMUTE
5	A-GND	6	A-GND
7	LIN	8	A-GND
9	RIN	10	R-GND
11	A-GND	12	A-GND
13	-5V-A	14	A-GND
15	-5v-A	16	A-GND

CN303

1	+5v-A	2	A-GND
3	+5V-A	4	A-GND
5	+12V	6	D-GND
7	-12V	8	D-GND
9	DEMP	10	D-GND
11	A-GND	12	A-GND
13	LOUT1	14	A-GND
15	ROUT1	16	A-GND

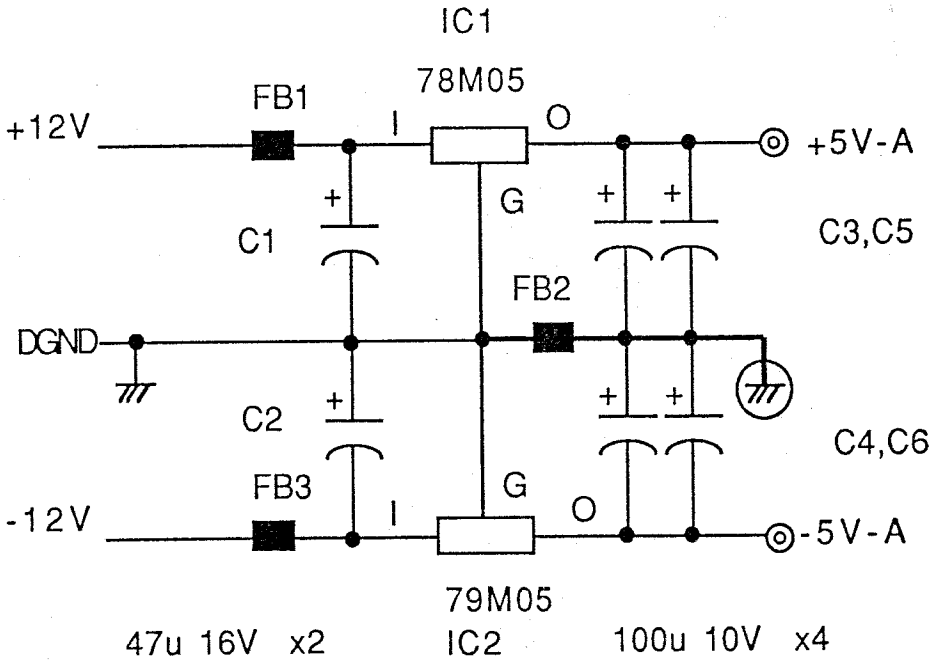
IC1
78M05
FB1
+12V
I
O
+5V-A
G
+
C1
C3,C5
FB2
DGND
C2
C4,C6
FB3
G
-12V
I
O
-5V-A
79M05
47u 16V x2
IC2
100u 10V x4

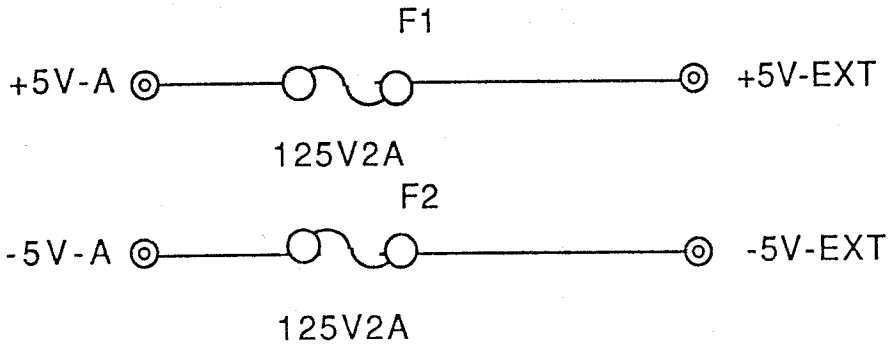
F1
+5V-A
+5V-EXT
125V2A
F2
-5V-A
-5V-EXT
125V2A

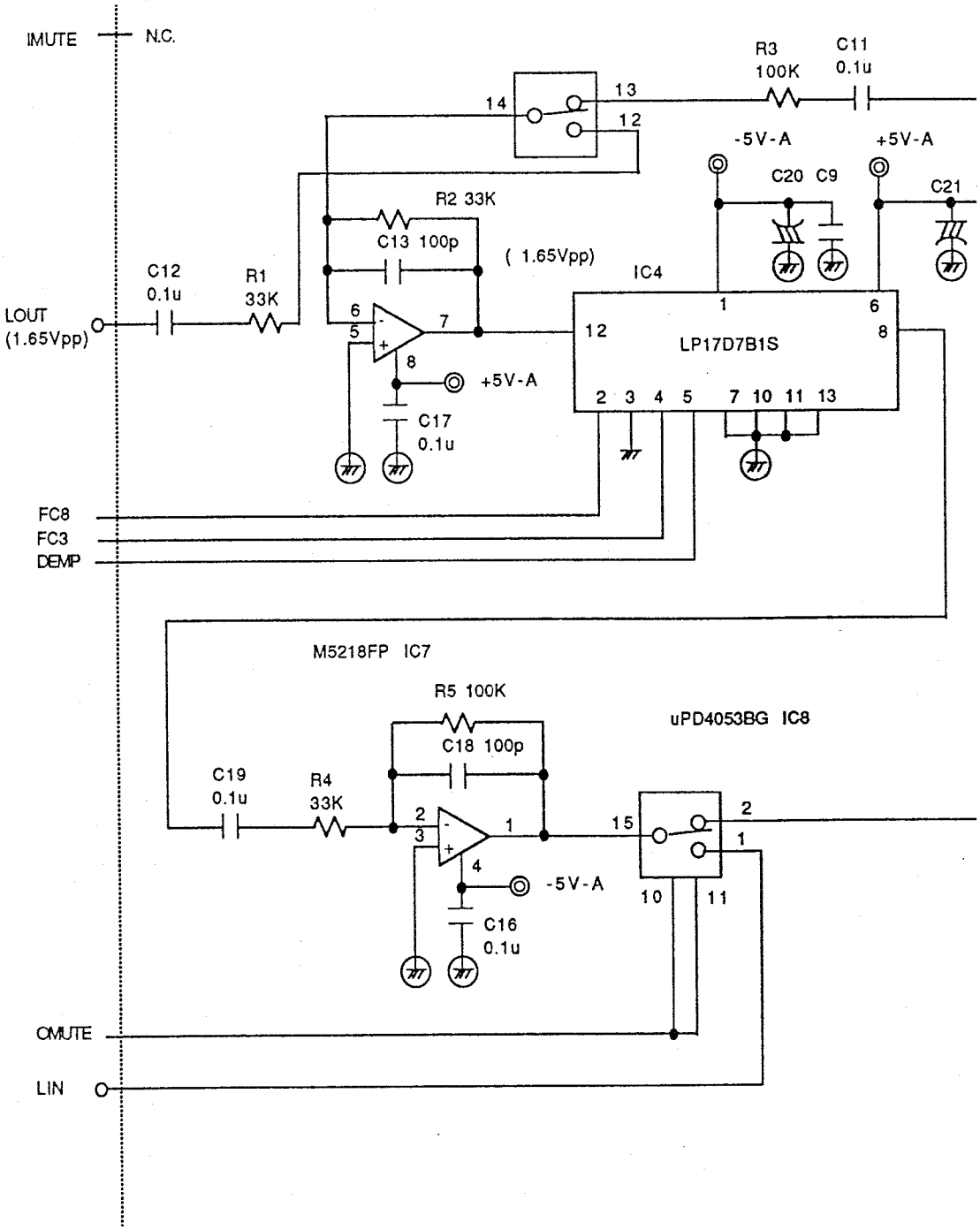
IMUTE
N.C.
R3
100K
C11
0.1u
14
13
12
-5V-A
+5V-A
C20
C9
C21
R2 33K
C13 100p
(1.65Vpp)
IC4
C12
0.1u
R1
33K
LOUT
(1.65Vpp)
6
5
7
8
+5V-A
C17
0.1u
1
6
12
8
LP17D7B1S
2 3 4 5 7 10 11 13
FC8
FC3
DEMP
M5218FP IC7
R5 100K
uPD4053BG IC8
C18 100p
C19
0.1u
R4
33K
2
3
1
4
-5V-A
C16
0.1u
15
2
1
10
11
OMUTE
LIN

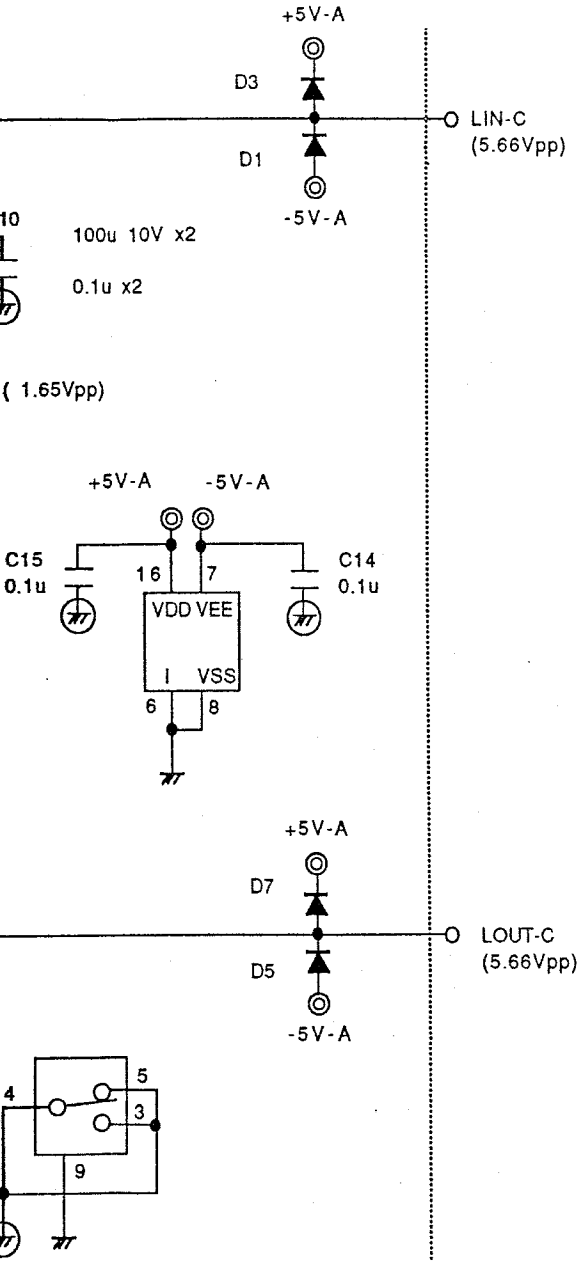
+5V-A
D3
LIN-C
(5.66Vpp)
D1
-5V-A
10
100u 10V x2
0.1u x2
(1.65Vpp)
+5V-A
-5V-A
C15
0.1u
16
7
C14
0.1u
VDD VEE
I VSS
6
8
+5V-A
D7
LOUT-C
(5.66Vpp)
D5
-5V-A
4
5
3
9

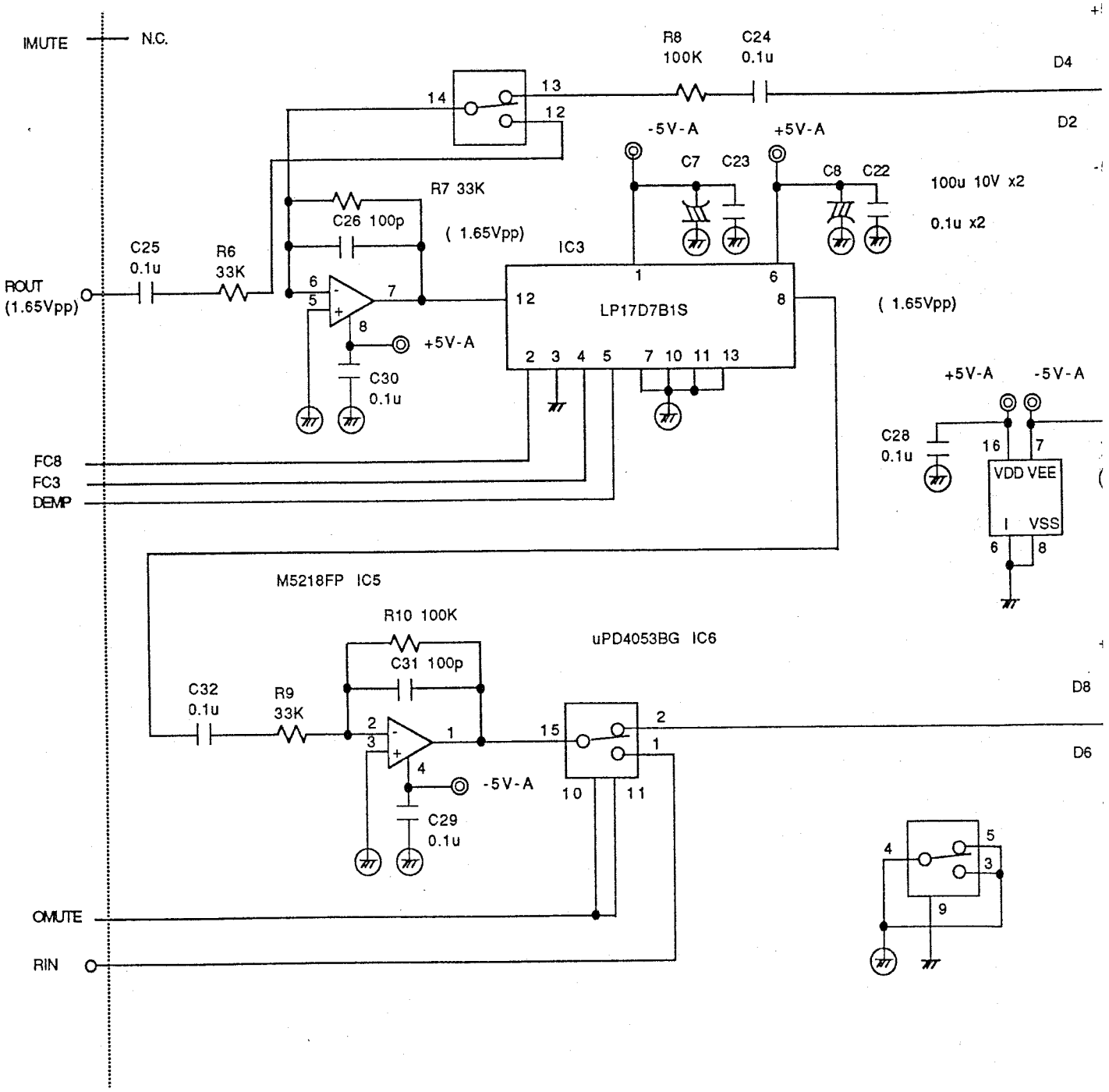
IMUTE
N.C.
R8
100K
C24
0.1u
D4
D2
-5V-A
+5V-A
C7
C23
C8
C22
100u 10V x2
0.1u x2
R7 33K
C26 100p
(1.65Vpp)
IC3
C25
0.1u
R6
33K
ROUT
(1.65Vpp)
LP17D7B1S
(1.65Vpp)
+5V-A
C30
0.1u
FC8
FC3
DEMP
+5V-A
-5V-A
C28
0.1u
VDD VEE
VSS
M5218FP IC5
R10 100K
C31 100p
uPD4053BG IC6
C32
0.1u
R9
33K
D8
D6
-5V-A
C29
0.1u
OMUTE
RIN

V-A

RIN-C
(5.66Vpp)

V-A

C27
0.1u

V-A

ROUT-C
(5.66Vpp)
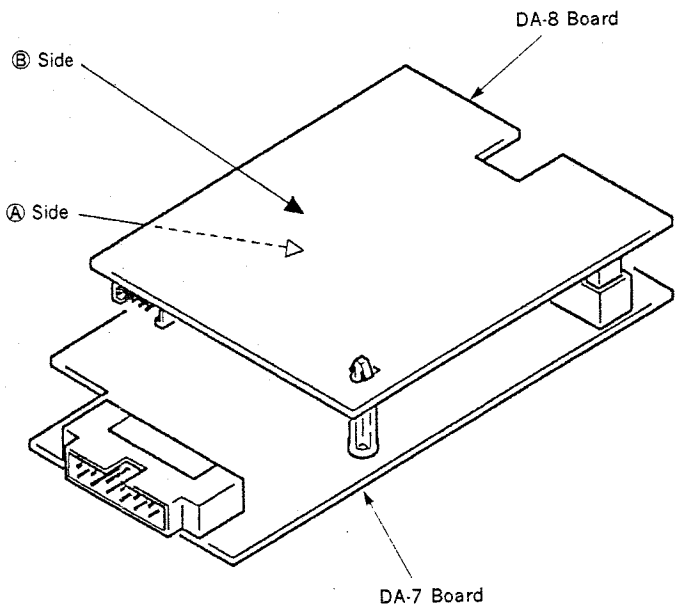
V-A