MICROLOG
CORPORATION

4 PROFESSIONAL DRIVE • SUITE 119
GAITHERSBURG • MARYLAND 20760
TELEPHONE (301) 948-5307

# CW & RTTY KEYBOARD

## MODEL AKB-1

## INSTRUCTION MANUAL

(effective 3 July 1979)

A SUBSIDIARY OF OLD DOMINION SYSTEMS, INC.

34 - 42-43-44-46
20 - 41

# TABLE OF CONTENTS


| | Page |
|---|---|
| Introduction | 1 |
| Preliminary Checkout | 2 |
| Keyboard Operation | 3 |
| A. "Message Store" Mode | 5 |
| B. "Text Entry" Mode | 13 |
| C. Transmitter Tune Control | 18 |
| Baudot (RTTY) Code Output Option | 19 |
| Operational Characteristics of RTTY Option | 20 |
| ASCII Code Output Option | 22 |
| Miscellaneous Options | 23 |
| ID Key Option | 23 |
| Auto Code Practice Option (Random Code) | 23 |
| Digital Selection of MORSE Speed | 23 |
| Split Screen Option | 24 |
| Special Message Key Option | 25 |
| Expanded Text Option (AKB-1E) | 25 |
| Control Commands | 28 |
| Transmitter Connections | |
| 1. CW | 31 |
| 2. RTTY | 34 |
| Rear Panel Connnections - Figure 2 | 35A |
| Calibrating Your AKB-1 Code Speed | 36 |
| In Case of Difficulty | 37 |
| Maintenance | 41 |

TABLE OF CONTENTS CONTINUED


| | Page |
|---|---|
| RTTY AFSK Modulator. . . . . | 42 |
| Internally Wired Unit (Inside Keyboard). . | 42 |
| External (Remote) Box. . . . . | 42 |
| Description and Operation. . . . . | 43 |
| Calibrating the AFSK Modulator . . . . . | 44 |
| AFSK Modulator Calibration . . . . . | 45 |
| RTTY "BRAG TAPE" Accessory . . . . . | 46 |
| Appendix A | |
| Suggested Circuit for Inverted RTTY Output from the AKB-1 Keyboard. . . . . | 48 |
| Schematics . . . . . | 50 |
| System Hookup . . . . . | 50 |

## INTRODUCTION

The new AKB-1 provides you with an advanced Morse/RTTY keyboard featuring text and message memories. The text buffer holds up to 127 characters* The message memory can store up to four (4) separate messages totalling 64 characters. The AKB-1 contains its own sidetone monitor and internal speaker which may be disconnected by removing the speaker shorting Phono plug on the rear panel.
Code speed is adjustable from approximately 5 to 75 wpm by rotating the speed control knob on top of the cabinet** This control knob also activates the on/off power switch.

The AKB-1 has provisions for positive (cathode) or negative (grid block) keying of your transmitter. Before connecting to your transmitter, be sure to read the section on "Transmitter Connections". An improper connection will damage the built-in switching transistors and render your unit inoperative.

We suggest that you first become familiar with the operation of the AKB-1 using the internal sidetone monitor.

*Option with 1950 character text buffer and 10 message memories is available with the AKB-1E.
**Optional digital selection of MORSE speed via the keyboard (5-99 wpm) is available.

## PRELIMINARY CHECKOUT

Make sure that the monitor speaker is enabled by inserting a shorting plug into the "spkr" jack on the rear panel. Plug your unit into a 115 VAC outlet and turn on. There should be no audio output at this point. In the unlikely event that you hear a steady audio tone, turn your unit off and back on immediately.

You are now ready to enable the keyboard to output Morse code. To enable:

a. Press and hold SHIFT key with one finger.

b. Press and release $\overline{KN}$ key with another finger.

c. Release SHIFT key.

Now if you type an alphanumeric character, the corresponding Morse code will be output via the built-in monitor speaker. Adjust the speed control to suit* and verify that each alphanumeric key produces the appropriate Morse code.

In the event your unit fails this preliminary checkout, proceed with the section IN CASE OF DIFFICULTY.

*Note that speed increases as you move the control counter clockwise.

**If your keyboard is equipped with the brag tape option, keep the play record switch in the record position for normal operation.

## KEYBOARD OPERATION

Keyboard control functions are accomplished by means of selected keys in conjunction with the SHIFT or CTRL keys. A shift character or a CTRL character is entered by holding down the SHIFT (or CTRL) key with one finger, while typing the designated character with another finger. For example, to enter a CTRL T character, you

- hold down the CTRL key with one finger;
- press and release the T key with another finger;
- release the CTRL key.

A full description of all control functions and characters is given in the Keyboard Commands Table.

The AKB-1 has two basic modes of operation, a "text entry" mode and a "message store" mode. In the "text entry" mode, which is the usual mode of operation, all typed characters are entered into the text buffer memory. The corresponding code will be output provided the keyboard has been enabled (SHIFT $\overline{KN}$). The "message store" mode is used to store up to four*(4) separate messages which may be retrieved by means of special keys when you are in the "text entry" mode.

*Up to 10 messages in AKB-1E

Your AKB-1 is equipped with a solid state lamp (LED) to indicate text buffer status. This indicator lamp turns on to half brightness when the text buffer is half full and to full brightness when the text buffer is within 4 characters of its maximum capacity. This feature insures that you won't accidentally overflow the text buffer.

We will now proceed with a detailed description of each mode of operation, beginning with the "message store" mode.

A. "MESSAGE STORE" MODE

In this mode you can enter your selected message(s) into the permanent message memory for later retrieval. The message memory has a total of 64 characters* with entry points at character positions 1, 17, 33 and 49, e.g., a message may be programmed to start at any one of these four entries.

To enter the "message store" mode, you first type CTRL HERE IS. Then, to enter a message starting with the first entry point (character one (1) of message memory), you press the 1 key followed by your desired text. To end your message press the ESC key. This will cause you to exit from the "message store" mode and return to the "text entry" mode, where you can now retrieve your message at any time by simply pressing the HERE IS key followed by the 1 key. (Two separate key strokes)

To enter a message starting with the second entry point (character 17) of the message memory, you press the CTRL HERE IS key. This puts you in the "message store" mode. Then you type a 2 followed by the message text and then ESC. You can now retrieve and output this message at any time by simply typing HERE IS followed by the 2 key.

*For 'expanded text' option see appropriate section.

In a similar fashion, you may enter messages starting with the third and fourth entry points (characters 33 and 49) of the message memory by typing HERE IS 3, and HERE IS 4, respectively. Expanded text Keyboard: HERE IS 1, HERE IS 2, ....HERE IS 9, HERE IS Ø, ten memories.

EXAMPLE 1:

Assume that you want to store the following four (4) messages:

a. DE□W3GPD (□ = space bar key)

b. QTH□MD.

c. NAME□IS□JOE

d. XMTR□150□WATTS

You then proceed as follows:

| | | | |
|---|---|---|---|
| a.1. | CTRL HERE IS | | (causes entry into "message store" mode) |
| a.2. | type | 1 | (first entry point) |
| a.3. | type | DE□W3GPD | |
| a.4. | type | ESC | (causes return to "text entry" mode) |
| b.1. | type | CTRL HERE IS | |
| b.2. | type | 2 | (second entry point) |
| b.3. | type | QTH□MD. | |
| b.4. | type | ESC | |

c.1. type CTRL HERE IS

c.2. type 3 (third entry point)

c.3. type NAME␣IS␣JOE

c.4. type ESC

d.1. type CTRL HERE IS

d.2. type 4 (fourth entry point)

d.3. type XMTR␣150␣WATTS

d.4. type ESC

Now any time you press HERE IS key, followed by the 1 key, the stored message "DE W3GPD" will be instantly entered into the text buffer for output. You can think of the HERE IS key, followed by the 1 key, as a shorthand notation for the character string "DE W3GPD". Similarly, typing HERE IS 2 will place "QTH MD." into the text buffer for output. Typing HERE IS 3 will output "NAME IS JOE", and typing HERE IS 4 will output "XMTR 150 WATTS".

EXAMPLE 2:

You want to store the following two (2) messages:

a. DE␣ZF1SP (nine characters)

b. QTH␣GRAND␣CAYMAN,PSE␣QSL␣VIA␣W4HET␣,␣73␣SK

(41 characters)

Then,

```
type  CTRL HERE IS
type  1
type  DE□ZF1SP              (□ = space bar key)
type  ESC
type  CTRL HERE IS
type  2
type  QTH□GRAND□CAYMAN,PSE□QSL□VIA□W4HET□,□73□SK
type  ESC
```

Now whenever you type HERE IS 1, the first character string "DE ZF1SP " will be placed into the text buffer for output. Similarly, typing HERE IS 2 will cause the second character string to be entered into the text buffer for output.

Note that in the above example the two messages take a total of 50 characters for the message text, plus two (2) characters for the end message (ESC) characters. Even though the message memory has room for 64 characters, we cannot store an additional message because all four entry points have been filled. For example, if you type HERE IS 3 you will output the character string beginning at the third entry point (character 33) of the message memory. In this case you will output the string

",PSE□QSL□VIA□W4HET□,□73□SK"

whereas, typing HERE IS 4 will output the character string beginning at the fourth (character 49) entry point of the message memory which, for the above case, results in the string

"ET□,□73□SK" .

You can take advantage of these fixed message memory entry points and arrange your message in blocks of 16 characters starting at each entry point. In the above example, rearrange your message as

QTH□GRAND□CAYMAN
□QSL□VIA□W4HET,□
73□SK .

Then typing HERE IS 2 will output the entire message. Typing HERE IS 3 will output the partial message

□QSL□VIA□W4HET,□73□SK

and typing HERE IS 4 will only output

73□SK .

The above examples are designed to help you in arranging and saving your stored messages in the most efficient manner. In summary, you have the following basic options for message storing:

- Store up to four*(4) separate messages of up to 15 characters each (the 16th character is ESC), as illustrated in Example 1.

- Store two separate messages --- one of 15 characters or less and a second one of up to 47 characters --- as illustrated in Example 2.

- Store two (2) separate messages of up to 31 characters each.

- Store a single message of up to 64 characters (including ESC). Enter the message with the CTRL HERE IS 1 command key. Typing the HERE IS 1 key will retrieve the entire message. Typing

*With Expanded Keyboard Option there are 10 memories of 80 characters each.

HERE IS 2 will retrieve the portion of the message beginning with the 17th character. Typing a HERE IS 3 will output the part of the message beginning with the 33rd character, and typing a HERE IS 4 will output the part beginning with the 49th character of the message.

There are no restrictions as to when you can enter the "message store" mode. To enter this mode, type CTRL HERE IS at any time, even while keyboard outputs previously typed text.

To summarize,

- You enter the "message store" mode by typing CTRL HERE IS (hold one finger on the CTRL key and press the HERE IS key.

- This must be followed by one of the following: 1, 2, 3, or 4 keys. (5,6,...9,Ø Expanded text) All other keys will be ignored at this point.

- You follow with the text of your message.

- You terminate by typing ESC. This causes a return to the "text entry" mode.
- In the "text entry" mode, typing a HERE IS 1, HERE IS 2, HERE IS 3, or HERE IS 4 will cause the respective message to be output.

B. "TEXT ENTRY" MODE

In this mode typed characters are entered into the text buffer memory and the typed text will be transmitted provided the keyboard is enabled (SHIFT $\overline{KN}$ ). A list of the available keyboard commands is given in Table I. The use of these keyboard commands will be illustrated by means of the following examples:

EXAMPLE 3. Use of REPEAT and SHIFT REPEAT COMMANDS

Suppose you want to be able to repeat

"CQ□CQ□CQ□DE□W4HET□W4HET□".

You then

type: SHIFT REPEAT (both keys together)

type: CQ□CQ□CQ□DE□W4HET□W4HET□ .

Now press the REPEAT key and the above text will be transmitted again. Type several REPEAT's and the text will be repeated

as many times as you typed REPEAT. Note that the REPEAT key is also entered into the text buffer memory the same as any other character. If you wish to repeat a long segment of text, you are only limited by the maximum length of the text memory. The total character count should include the REPEAT characters.

EXAMPLE 4.

Now suppose you wish to send the same message as in Example 3, except that you wish to repeat it three times and follow by transmitting K. You could, of course, do this by typing

SHIFT REPEAT
CQ□CQ□CQ□DE□W4HET□W4HET□
REPEAT
REPEAT
K .

A better way, however, which allows more flexibility, is through the use of the "message store" option. In this example, type

CTRL HERE IS

1

SHIFT REPEAT

CQ␣CQ␣CQ␣DE␣W4HET␣W4HET␣

REPEAT

REPEAT

K

ESC .

Now, every time you type HERE IS 1, the CQ will be repeated three (3) times followed by the letter K.

This example also illustrates that you can additionally store command characters into the message memory.

EXAMPLE 5. Using "End Message" Command

You are in QSO with ZF1SP. After turning over to him, you type SHIFT $\overline{AR}$, then continue typing text for your next transmission while keyboard continues sending, e.g.,

.....ZF1SP␣DE␣W3GPD␣K␣

SHIFT $\overline{AR}$

ZF1SP␣DE␣W3GPD␣FB␣PAUL.....

Then, when he turns it back to you, type SHIFT $\overline{KN}$ to enable keyboard to output, and the text you typed after the SHIFT $\overline{AR}$ will be output right away while you continue to type. Another use for this command is that, as soon as you finish your current transmission, the keyboard is automatically disabled for transmission and you can input any questions as he is transmitting. Then, as soon as he turns it back to you, simply type SHIFT $\overline{KN}$.

EXAMPLE 6. Use of "End Transmission" Command

Typing a SHIFT $\overline{SK}$ will cause the transmission of text to cease immediately. To continue you type SHIFT $\overline{KN}$. This command is useful whenever you want to disable the keyboard for output, allowing you to prestore your text. Or, during a repetitive CQ call, you may want to stop and listen before continuing.

EXAMPLE 7. Use of "BACKSPACE" Command

The BACKSPACE key may be used to correct typing errors when you are in the "text entry" mode. If the text you are typing is more than two (2) characters ahead of the text being transmitted (speed control is set at a

slower speed than your typing speed), then typing BACKSPACE will erase the previous character from the text memory. If, on the other hand, the text you are typing leads the output text by two (2) or less characters, then typing a BACKSPACE will be ignored. If the keyboard is disabled, you can erase all characters by typing BACKSPEACE.

EXAMPLE 8. Use of "CLEAR" Command

Typing a CTRL $\overline{KN}$ will cause the text buffer memory to be cleared and will disable the keyboard for transmission. Any text you type after the CTRL $\overline{KN}$ will be entered into the text memory. To transmit the text you must enable the keyboard by typing SHIFT $\overline{KN}$. This command is handy if you want to terminate a long transmission, such as a repetitive message.

EXAMPLE 9. Use of Enter and Exit "Message Store" Mode Commands

Typing CTRL HERE IS transfers you to the "message store" mode. Typing ESC returns you to the "text entry" mode. Detailed usage of these commands was given in Examples 1 and 2.

EXAMPLE 10. Use of Message Retrieval Commands

Typing HERE IS 1, HERE IS 2, HERE IS 3, HERE IS 4, will cause a message to be retrieved from the message memory and be entered into the text memory. The 64 character message memory has four (4)*entry points located at character positions 1, 17, 33, and 49. If you type HERE IS 1 then all characters, beginning with character 1 of the message memory and ending with the character preceding an ESC, will be placed into the text buffer memory. Similarly, if you type HERE IS 2, HERE IS 3,or HERE IS 4, then all characters beginning with character 17, 33, and 49, respectively, of the message memory, and ending with the character preceding an ESC, will be placed into the text buffer memory. Additional details were given in Examples 1 and 2.

C. Transmitter Tune Control

A key down command useful for transmitter tuning is accomplished by typing SHIFT BT hold down both keys, SHIFT and the BT). To disable, type CTRL KN (erase buffer). Then shift KN (enable) for CW only keyboard. Type shift Ø (go to MORSE) for CW/RTTY Keyboard.

*Expanded text option keyboards have 10 message memories. See appropriate section in insturction manual.

baud - unità di velocità di trasmissione telegrafica un punto per secondo

## RTTY OPERATION

When your AKB-1 is equipped with this option you will be able to generate RTTY code with all features and operating characteristics found in MORSE code operation.

When your unit is first turned on it is initialized for MORSE code. To enable it for RTTY code generation, simply type CTRL T (CTRL and T keys together). You will now be able to output RTTY (5 level Baudot) code at 60 words per minute (45 baud). To operate at other RTTY speeds, simply type CTRL X (CTRL and X keys together) followed by the desired Baudot RTTY speed in words per minute. Allowable speeds are 60, 66, 75 and 100 words per minute. If your unit is equipped with the ASCII option, you can type CTRL X followed by 11Ø, and you will be able to generate ASCII (8 level) code at 110 baud rate. To switch back to MORSE, simply type CTRL M (CTRL and M keys).

For example, when you turn the unit on it is set for MORSE code. To change it to RTTY at 60 wpm, simply type CTRL T. If you want to change RTTY speed to 100 wpm, simply type CTRL X followed by 1ØØ. To go back to 60 wpm operation, type CTRL X followed by 6Ø. The above control commands will instantly change the operating mode.

An alternate mode for switching between MORSE and RTTY is as follows. MORSE to RTTY, type SHIFT BT ( SHIFT and BT keys together). RTTY to MORSE, type SHIFT Ø (SHIFT and Ø keys together). This alternate way of switching modes takes effect only if the keyboard is enabled and the text buffer is empty. Thus if you are in the MORSE mode, and the text buffer is not yet empty when you type SHIFT BT, all characters prior to the SHIFT BT will be sent in MORSE code, and all those typed after the SHIFT BT will be sent in RTTY code. The RTTY speed will be at whatever your last speed entry (CTRL X) was. A similar situation occurs if you switch back to MORSE by SHIFT Ø.

The RTTY code is a pattern of accurately-timed "marks" and "spaces". When no character is being transmitted, the normal mode is the "mark" condition. As each character is transmitted, the Keyboard will generate a "space" start bit followed by a 5 bit pattern which describes the character followed by a "mark" stop bit.

The code is output via the transmitter keying terminal and it will generate a key-down condition at its output whenever it outputs a "mark" and a key-up condition whenever it outputs a "space".

RTTY is normally transmitted by means of FSK (Frequency Shift Keying). With this modulation technique, the transmitter outputs a carrier at a desired frequency for the "mark" and outputs a carrier at a shifted frequency for the "space".

A frequency shift of 170Hz has become the "standard" for most amateurs, but other shifts are also permitted.

You can connect the keyboard for FSK modulation, by tying the keying output terminals to a circuit that shifts the VFO of your transmitter by 170Hz between marks and spaces. Alternatively, for SSB transmitters, this FSK modulation can be easily implemented by using an AKB-1 equipped with an AFSK modulator accessory (such as the Microlog AFSK-1)* and feeding its audio outputs into the transmitters microphone input.

For more specific details of FSK modulation techniques, contact the manufacturer of your transmitter. The ARRL RTTY Handbook is also a valuable reference book.

A word of caution--many transmitters require reduced power output for FSK modulation due to the 100% Carrier duty cycle.

Operational Characteristics of RTTY Option

The AKB-1 will generate the correct baudot code for all letters, numbers, spaces, punctuation and control characters. The unit will automatically insert "letters" and "figures" codes as required in order that the transmitted signal sends your desired message correctly.

*See section on "AFSK Modulator"

It will also insert an automatic CRLF after 70 characters, or after 65 characters if followed by a character space in order not to break up most words. You can send a CRLF manually by typing RTN (SK) key. Pressing the LF key will send a line feed code.

## ASCII Code Output Option

When your AKB-1 is equipped with this option it will enable you to generate ASCII code with all the features and operating characteristics found in Baudot code operation.

To enable the ASCII mode, if keyboard is in MORSE mode, simply type CTRL T (CTRL and T keys), followed by CTRL X (CTRL and X keys), followed by 11Ø. If keyboard is already in RTTY mode, you do not need to type CTRL T.

This will cause the keyboard to generate standard ASCII code at 110 baud (ASR 33 compatible). Except for the letters and figures code which are not a part of the ASCII table, all prior comments related to the Baudot Option apply also to ASCII.

Pressing the "BT" key will send an equal sign (=).

## MISCELLANEOUS OPTIONS

### ID Key Option

If your AKB-1 is equipped with the ID Key Option, the special key marked ID will output your call letters. This key is used like any other character key on the keyboard. Each time the ID Key is depressed it produces the same results as if you typed your call preceeded by a space. For RTTY equipped units, typing CTRL ID will send your call in Morse, and return to RTTY mode.

### AUTO CODE Practice Option

If your AKB-1 is equipped with this option, a special key has been provided marked "RAND CODE". To activate this option, type SHIFT KN to enable the keyboard output. Then type SHIFT RAND CODE. The keyboard will now output code in 5 character groups of random characters.

To disable this option, type any key. The AKB-1 will output three (3) more characters and stop.

### Digital Selection of MORSE Speed

This option lets you select the exact MORSE speed by simply entering it on the keyboard. To enter the desired speed, simply type CTRL X (both keys) followed by 2 digits representing the desired speed. For example, if you wish to operate at 8 words

per minute, type CTRL X followed by the 2 digits 08. To operate at 25 words per minute, type CTRL X followed by 25. Any speed, from 05 to 99 words per minute may be entered. If you want to go back and control the speed by means of the potentiometer control, turn keyboard off then on again. The keyboard must then be enabled by typing SHIFT $\overline{KN}$. When unit is first turned on, the speed is controlled by the potentiometer. You may enter digital MORSE speed at any time, even while keyboard is transmitting. As soon as you have entered the new speed, keyboard will respond. NOTE: You cannot enter digital MORSE speed unless keyboard is in the MORSE mode.

SPLIT SCREEN OPTION

If your units are equipped with this option be sure to connect special multi-conductor cable between the AKB-1 and AVR-2. Then, to enable this option, type CTRL SPACEBAR on your keyboard by pressing and holding the CTRL key with one finger while pressing the SPACEBAR key with another finger. Characters entered on your keyboard will now be displayed on upper part of T.V. monitor screen. To move the 'split' line on your screen press and hold the CAL button for at least 5 seconds then the split line will start moving down in steps until it reaches its lowest point, then it will restart at its top position. Remove finger from CAL button when line is at desired position. Set mode switch to desired operating mode.

## Split-Screen Operating Notes

1. The Split-Screen mode allows the AVR-2 to actually look into the text buffer on the keyboard and display this information before it is sent out. This data is transferred on the 5 conductor cable between the AKB and the AVR. Heretofore, this data was locked in the AKB text buffer until it was called for. This option gives the operator the ability to correct errors and format the text exactly as it will appear when transmitted.

2. Split-Screen option is functional in both the normal size display mode and in the magnified text mode.

3. CTRL SPACEBAR enables the Split-Screen mode (hold down CTRL key and hit the spacebar).

4. To disable the Split-Screen mode, hit CTRL SPACEBAR again. Note the flip-flop action--1st hit enables, 2nd hit disables.

5. If interconnecting cable is inadvertently disconnected, and Split-Screen mode is enabled, the units will automatically disable the Split-Screen mode after a short "TIME OUT" and will revert to normal operation of both AKB and AVR. "TIME OUT" is about 8 seconds in MORSE; shorter in RTTY codes.

6. The location of the "SPLIT" line can be moved so that the number of lines allotted for receive and transmit can be changed to suit your needs. The range of variation is from a minimum of 1 to a maximum of 19 lines of transmit text.

   To change the "SPLIT" location, push and hold the calibrate button for at least five (5) seconds. Then the "SPLIT" line will start to step down the screen. Hold the button in until the desired number of lines of display are selected. Note that, if you release the botton and push it again, you must wait for the time delay before the line will start to move.

7. If the repeat key is pushed on the keyboard the symbol "■■" will be displayed for each push, instead of the entire text being repeated.

## Checkout and Operation

1. Both units should be connected for normal operation. The AVR AUX input should be connected to the keyboard as before. Connect the 5 conductor 'Split-Screen' cable between the AKB and AVR.

2. Turn* on both units and go through the normal start-up procedure of setting the clock on the AVR and enabling the desired code on the keyboard. The keyboard should beep normally and the AVR-2 display will be the same as before except for the addition of a 2nd underscore line, three line spaces below the top line underscore. This is the dividing line between the transmit or edited text on the top of the screen and the received or "REAL TIME" transmitted text on the bottom of the screen.

3. Hold the CTRL key down and press the SPACEBAR once. Release the SPACEBAR first, then the CTRL key. This enables the Split-Screen mode of operation. If this mode is not enabled, there will be no text appearing above the dividing line.

4. Type a string of characters on the keyboard. They should appear instantly on the lowest line above the dividing line. As the line is filled, the text scrolls up the screen just as the received text does on the bottom.

5. Try storing a message in one of the storage location--"HERE IS", etc. The stored text should appear on top just as before. At this point this message can be edited for mistakes by typing the "BACKSPACE" key however many times it may be necessary to correct the error and retype the desired text. Recalling the text for transmission by typing "HERE IS", etc., will cause the message to again appear instantly on the top of the screen. The top display will remain stationary as the text is outputted and printed in "REAL TIME" as in normal operation.

6. To edit text for "on-the-air" transmission, you can put the keyboard in the stand-by mode by typing SHIFT SK and typing your text. Edit via the BACKSPACE key as before.

7. Since some keyboard characters do not have printing symbols, the AVR will display special symbols for non-printing characters stored into the text buffer. This allows you the capability of editing these characters like any other.

* NOTE: The cables to both units should be connected before turning on the units. It is IMPORTANT to remember that the keyboard should be turned on first to enable the split screen option, then the AVR.

SPECIAL MESSAGE KEY OPTION

This option allows you to send your name, Qth, etc. To send your special message type CTRL N. Hold the CTRL key down while you type N, release CTRL.

EXPANDED TEXT OPTION (AKB-1E)

If your keyboard is equipped with this option you have the ability to store up to 195Ø characters in your text and message memories. You can select from one to ten "message" memories. These memories can hold up to 80 characters each. When you first turn your keyboard on you may utilize any one of these 10 "message" memories in the same manner as for the standard keyboard except that you can utilize HERE IS 5, HERE IS 6, HERE IS 7, HERE IS 8, HERE IS 9, HERE IS Ø keypresses to access the additional "message" memories. Futhermore each "message" memory can hold at least 5 times as many characters as in the standard keyboard, and the last HERE IS Ø also holds up to 80 characters. When all ten "message" memories are active (default option) the text buffer memory can accomodate up to 115Ø characters.

The text buffer can be allocated up to 187Ø characters depending on your specific needs. When the keyboard is first

turned on it defaults to ten message memories of 80 characters each, for a total of 800 programmable "message" characters. More than one location can be used for a message longer than 80 characters. If more text buffer is needed, some of the message memories can be deleted and the space used for the text buffer. All but one message memory can be deleted. The following chart depicts the various combinations possible.

| Number of Message Memories | Locator | Total Number of Characters | Number of Characters in text buffer |
|---|---|---|---|
| 10 | HERE IS Ø | 800 | 115Ø |
| 9 | HERE IS 9 | 720 | 123Ø |
| 8 | HERE IS 8 | 640 | 131Ø |
| 7 | HERE IS 7 | 560 | 139Ø |
| 6 | HERE IS 6 | 480 | 147Ø |
| 5 | HERE IS 5 | 400 | 155Ø |
| 4 | HERE IS 4 | 320 | 163Ø |
| 3 | HERE IS 3 | 240 | 171Ø |
| 2 | HERE IS 2 | 160 | 179Ø |
| 1 | HERE IS 1 | 80 | 187Ø |

Storage and retrieval of messages is the same as in the case of the standard AKB-1 except that you use HERE IS 5, HERE IS 6, HERE IS 7, HERE IS 8, HERE IS 9, HERE IS Ø for accessing the additional memories.

To change the desired number of memories you must enter the following key strokes

CTRL F (hold CTRL key, press F key)
\# (number of memories 0, 1, ... 9)

For example, suppose you want to change the number of memories to 5 thereby expanding the text buffer to 155Ø characters.

You enter:

CTRL F
5

If you want to reduce the number of message memories to a single one, type:

CTRL F
1

Note that when you change the number of message memories all previous messages will be erased.

An additional feature included with this "expanded text" option is the built-in "Quick Brown Fox..." test message. To send this test message, simply type:

CTRL Q (hold CTRL key, press Q key)

ChangeOver (T/R) Relay

Description:

The T/R Relay is essentially a keyboard activated "VOX" circuit. The time delay is adjustable from about ½ to 6 seconds. The relay is triggered anytime there is an output from the keyboard. For Morse operation, the circuit will time out and release the relay if there is a delay in typing longer than the pre-set time constant. In RTTY, the relay will hold in between characters regardless of the typing delay since the "mark" signal (on with no type) corresponds to a "key down" condition. To release the relay in RTTY, disable the keyboard by typing either shift SK (stop), shift AR (standby) or CTRL KN (erase). The relay will time out and release the transmit control. Since the relay is SPDT you can use either normally closed or normally open poles.

# KEYBOARD COMMANDS

| COMMAND | YOU TYPE | DESCRIPTION |
|---|---|---|
| Enable to Transmit | SHIFT $\overline{KN}$ | Enables ouput keying line. Any characters stored in text buffer will be output. |
| Disable (End Transmit) | SHIFT $\overline{SK}$ | Disables output keying line. Stops sending characters from text buffer. Output keying line switches to 'open' contact or RTTY 'space' condition. |
| End Message | SHIFT $\overline{AR}$ | Disables output keying when previous text in buffer has been transmitted. |
| Repeat Text | REPEAT | Repeats text in buffer memory starting with last entered 'repeat pointer'. |
| Repeat Test Pointer | SHIFT REPEAT | Points to beginning of text to be repeated. |
| Infinite Repeat | SHIFT BACKSPACE | Continues 'repeat' function until CLEAR command is entered. |
| CLEAR | CTRL $\overline{KN}$ | Clear text buffer; reset repeat pointer; disable keyboard keying line. |
| Enter 'Message' Store | CTRL HERE IS | Follow with desired memory number 1, 2, 3, 4, 5, 6, 7, 8, 9, 0. Message text follows next. |
| Exit 'Message' Store | ESC | Returns keyboard to 'text entry' mode. |
| Retrieve Stored Message | HERE IS | Followed by the desired memory number 1, 2, 3, 4, 5, 6, 7, 8, 9, 0. |
| Edit Errors | BACKSPACE | Last character typed is erased from buffer |

| COMMAND | YOU TYPE | DESCRIPTION |
|---|---|---|
| 'Word' Mode ON/OFF | CTRL W | Characters are output only when space-bar is pressed, or if 16 consecutive characters are entered. Message memory number 4 is disabled when this mode is active for standard AKB-1. |
| Split Screen Mode ON/OFF | CTRL SPACEBAR | Typed characters appear on upper part of TV monitor screen, even when keyboard is disabled. |
| MORSE CHARACTER SPACING | CTRL S | Followed by 0, 1, 2, or 3. Lets you increase the nominal spacing between MORSE characters. A 0 key entry results in nominal (default) spacing. A 3 key results in 'long' spaces between characters. |
| RTTY 'DIDDLE' OR BLANK FILL ON/OFF | CTRL D | Causes keyboard to output blank (rubout) character code during idle periods when no other characters have been entered. |
| SEND 'RY' | CTRL R | Keyboard will output a series of RYRY..... |
| 'QUICK FOX' | CTRL Q | Keyboard will ouput: THE QUICK BROWN FOX... (expanded text versions) |
| MORSE ID | CTRL ID | Available with ID option. Will output MORSE ID and return back to RTTY mode. |
| SPECIAL MESSAGE | CTRL N | Sends preprogrammed message. |
| RANDOM CODE | SHIFT RAND | Enables Random 5 letter code group output. |
| RTTY MODE | CTRL T | Changes mode from MORSE to RTTY at previously selected speed-default is 60 wpm. (No delay--changes instantly when T key is pressed) Requires enable - SHIFT KN. |

| COMMAND | YOU TYPE | DESCRIPTION |
|---|---|---|
| RTTY MODE | SHIFT BT | Shifts mode Back To RTTY as soon as all previously entered text buffer characters have been output. Does not require enable. |
| MORSE CODE | CTRL M | Change mode from RTTY to MORSE. (No delay--changes the instant the "M" key is pressed) Requires enable SHIFT KN. |
| MORSE MODE | SHIFT Ø | Change mode back to MORSE from RTTY as soon as text buffer empties. Does not require enable. |
| MORSE SPEED SELECT | CTRL X | Follow by 2 digits (05 to 99) to select desired MORSE speed. |
| RTTY SPEED SELECT | CTRL X | Follow by desired RTTY speed in wpm 60, 66, 75, or 100 for Baudot code, or 110 baud for ASCII. |

NOTE: The 'Word Mode', 'Split Screen', and 'RTTY DIDDLE' commands operate in an On/Off mode. You type CTRL W to enable the Word Mode. Once enabled, typing the same command will disable the Word Mode. Similarly, for the CTRL Spacebar in the case of the Split Screen command, the CTRL D for the RTTY DIDDLE command.

TRANSMITTER CONNECTIONS (See Figure 2)

1. CW

Your AKB-1 has provisions for positive (cathode) and negative (grid block) keying of your transmitter. Before making connections to your transmitter, make sure that open key voltage and closed key current do not exceed the maximum ratings of the AKB-1 switching transistors.

For grid block keying, measure the open key voltage between the transmitter keying terminal and ground, using a high input impedance voltmeter such as a VTVM. If this voltage exceeds -150 volts, do not connect your transmitter directly to the AKB-1. Instead, use a keying relay as described below. If the measured voltage is less than 150 volts, you may connect directly to the AKB-1 for solid state keying. Use a shield cable to connect your transmitter's CW keying line to AKB-1 keying jack marked ⊖ . If your AKB-1 is equipped with "screw terminals" instead of phono jacks, connect the shield to the AKB-1 terminal marked G, and the inner conductor to the terminal marked ⊖ .

For positive or cathode keying, measure the open key voltage and the closed key current at your transmitter's key terminals. If the voltage is in excess of 40 volts

or the current exceeds 300 ma, do not connect to the AKB-1 directly--use a keying relay. For direct connection, use a shielded cable. Connect your transmitter's (positive) keying line to the AKB-1 keying jack marked ⊕. For units with screw type terminals connect shield to terminal Ⓖ, and inner conductor to terminal ⊕.

Keying Relay Option

An option the AKB-1 may be provided with is a built-in keying relay ($15.00). If your unit comes so equipped, you may connect your transmitter to the AKB-1 using a shielded cable. Connect this cable to the AKB-1 jack marked 'RELAY', or if your AKB-1 is equipped with screw type terminals, connect the outer shield to the Ⓖ terminal, and the inner conductor to the Ⓡ terminal. This option may be used for either positive or negative keying transmitters.

The aux terminal is used for local loop connection to an AVR-2 companion decoder. Aux should not be used for any other purpose.

To use your own keying relay, connect one terminal of your relay coil to AKB-1 terminal ⊕. Connect the other relay coil terminal to a positive voltage (less than 40 volts) suitable for the particular relay. Select a relay whose current requirements are less than 300 ma. To further protect

the built-in switching transistor, connect a silicon diode across the relay coil terminals (anode connected to AKB-1 ⊕ terminal). The AKB-1 should be connected to your transmitter ground and to the negative (or ground) terminal of the relay power supply. The relay contacts can now be used to key your transmitter.

Collegamento di un allacciamento relè esterno

Connecting An External Keying Relay (Screw Type Terminals)

Terminali del tipo a vite

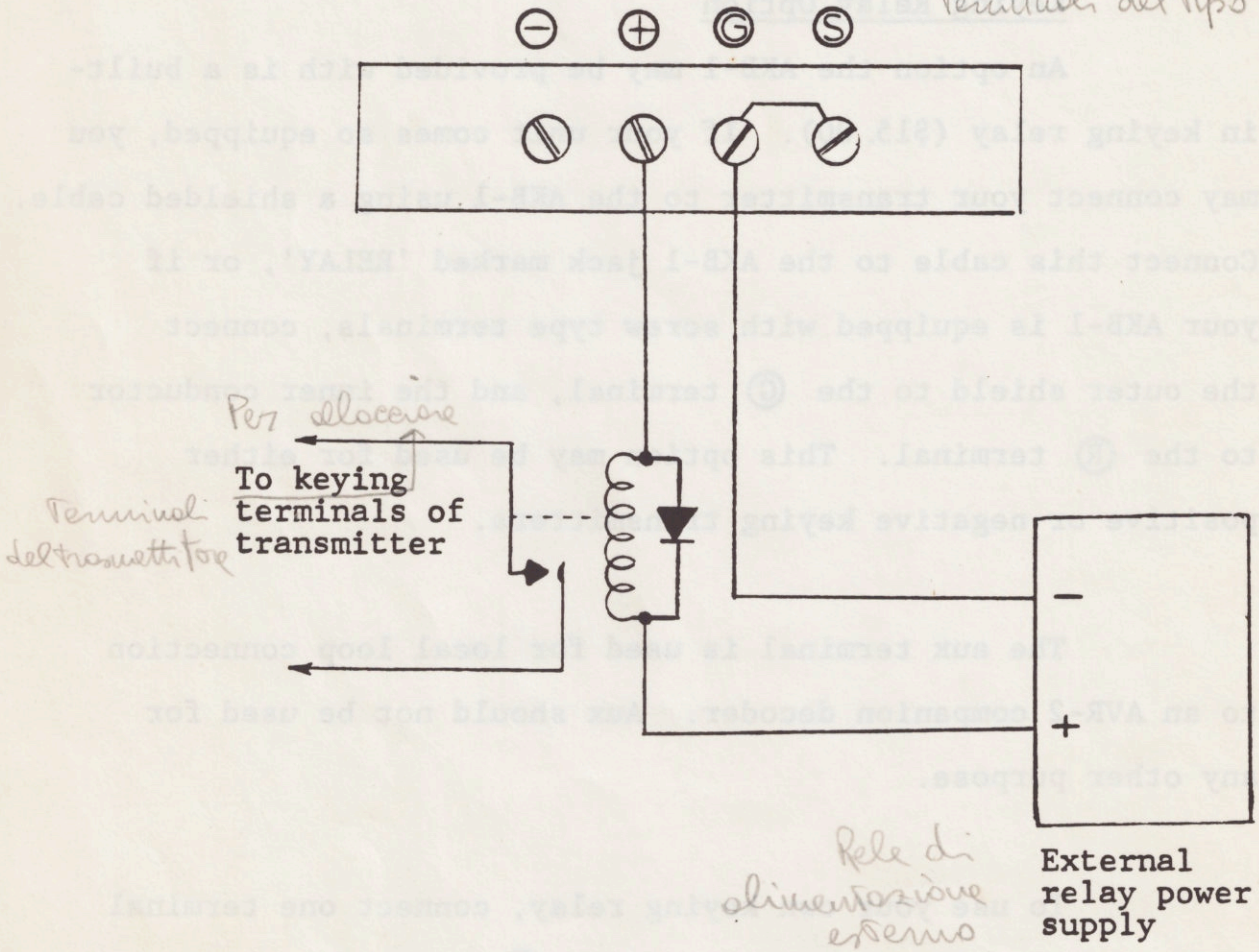


For units equipped with 'phono jack' connectors, connect one side of relay coil to inner conductor of a shielded cable and use phono plug to connect to ⊕ jack. Connect shield to negative terminal of external relay power supply.

NOTE: AKB-1E with keying relay ⊕ Output is not used.

2. RTTY Transmitter Connections (See Figure 2)

If your transmitter has provisions for FSK (Frequency Shift Keying) connect a shielded cable between the AKB-1 ⊕ jack and the transmitter's FSK jack. Note that in the "MARK" condition this ⊕ terminal pulls to ground, and becomes an 'open' circuit for "SPACE". You may also use the AKB-1 keying relay if your unit is so equipped, instead of the ⊕ terminal. Relay contacts short to ground in the "MARK" condition and open up in the "SPACE" condition. Among rigs having FSK provisions is the KENWOOD TS820.

To connect it to the AKB-1, use one shielded cable between the AKB-1 phono jack marked ⊕ and the TS820 FSK (RTTY) jack. Use another shielded cable between the AKB-1 phono jack marked ⊖ and the TS820 CW key jack. Both cables can be left permanently connected for both CW and RTTY operation.

Some other rigs, such as the Yaesu 901 or the Icom 701 have FSK inputs but use 'inverted' logic. This should not present a real problem since the receiving station can place his demodulator in the 'invert' position, or else switch sideband. On the other hand, if it is desirable to send 'right side up' with such a rig, you may use a simple single transistor circuit to invert the AKB-1 logic so that when it pulls to ground in the "MARK" condition the output of the

inverting transistor is high, yielding a "SPACE" condition for your transmitted signal. A suggested circuit for accomplishing this is given in Appendix A. Another way for inverting the AKB-1 MARK/SPACE logic is by means of the keying relay. If your unit is equipped with a keying relay, simply connect the N.C. (normally closed) contact to the phono jack instead of the N.O. contact.

If your rig is not provided with FSK use the MICROLOG AFSK modulator accessory. This accessory is available as an external unit or built into your AKB-1. It provides two audio tones (2125/2295 HZ) and is designed for 170 HZ shift. Simply connect the audio output from this AFSK accessory directly to the microphone input on your rig. For further details see the section on 'RTTY AFSK MODULATOR'.

## AKB-1 REAR PANEL CONNECTIONS

FIGURE 2

Shorting Plug to Enable Sidetone

Normally Open Transmit/Receive Relay (Optional) p.27

Normally Open Keying Relay Output (Optional) p.32

Brag Tape Connections p.46

Switch – Record and Normal Operation / Play Brag Tape

Mic – Connect to Recorder Microphone Input

Spkr – Connect to Recorder Speaker Output

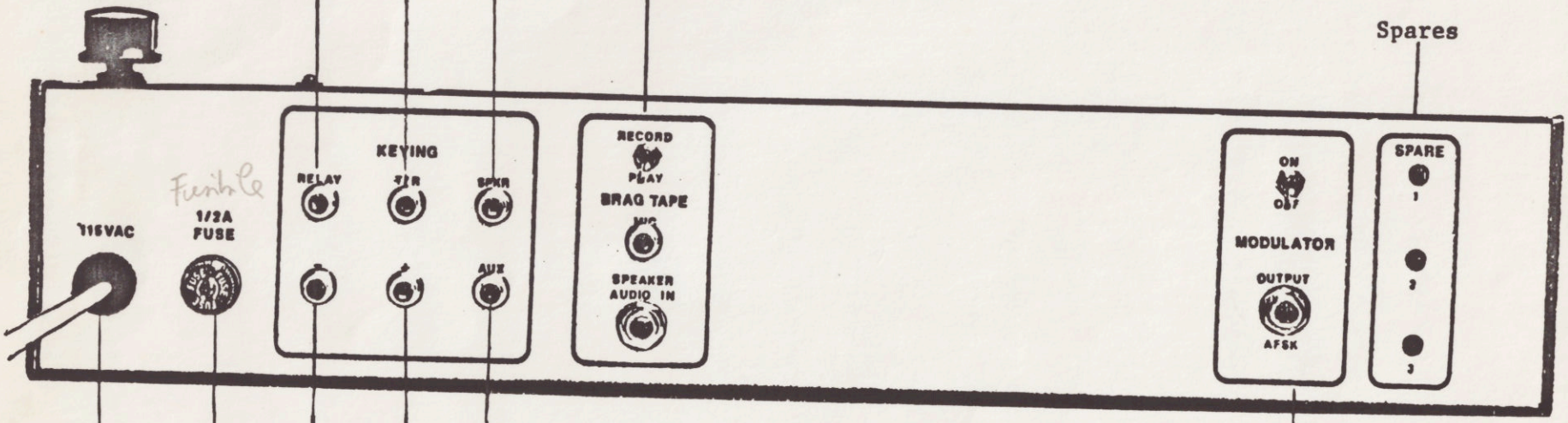


Spares

115 VAC Line Cord

1/2 AMP Fuse

Negative (Grid Block, etc.) Keying Output p.31

Positive Voltage (Solid State, Cathode, etc.) Keying Output p. 31

Auxiliary Output Goes to AVR-2 Aux Input

MODULATOR CONNECTIONS p.42

Switch – Keys XMTR PTT Line and turns on Modulator

↓ XMTR and Modulator Off

Output 3 circuit phone jack

Tip – Audio

Ring – PTT

Sleeve – Ground

## CALIBRATING YOUR AKB-1 CODE SPEED

If your unit does not have the 'Digital Morse Speed' option, here is a simple method for code speed calibration based on the ARRL 50-baud standard. You simply measure the length of time it takes to send the standard (50-baud) word PARIS ten times. Then, if the measured time in seconds is T, the corresponding code speed in words per minute is given by

$$\text{Code Speed (WPM)} = \frac{600}{T \text{ (sec)}}$$

For example, if T = 30 seconds, the code speed is exactly 20 words per minute.

We suggest that you use the AKB-1 message memory for storing the standard word PARIS ten times. You may then calibrate your unit for various settings of the speed control knob. Thus,

a. Press CTRL HERE IS key;

b. Press 1;

c. Press and hold SHIFT key down;

d. Press and release REPEAT key;

e. Release SHIFT key;

f. Press and release each of the following keys: P A R I S Space Bar;

g. Press and release the REPEAT key 9 times;

h. Press and release the ESC key.

Now if you press the HERE IS key, followed by the 1 key, the message, consisting of the word PARIS ten times will be transmitted.

## IN CASE OF DIFFICULTY

Your unit has been fully tested prior to shipment and we do not expect you to experience operational difficulties. However, as an aid we have listed below some potential or apparent malfunction symptoms and how to cure them.

A. SYMPTOM: Constant audio tone when unit is first turned on.

CAUSE: Microprocessor failed to be reset when power turned on.

CURE: Turn unit off and immediately on again.

B. SYMPTOM: Typed characters are not being output.

CAUSE: Sidetone speaker disabled.

CURE: Plug shorting plug into "SPKR" jack

CAUSE: Keyboard not enabled for transmission.

CURE: Type SHIFT $\overline{\text{KN}}$ to enable keyboard.

CAUSE: No power.

CURE: Check and replace fuse.

CAUSE: Microprocessor not reset when unit turned on.

CURE: Turn unit off and back on immediately.

C. SYMPTOM: Typing of some alphanumeric character(s) results in no output.

CAUSE: Bad key contact

CURE: Take off top of key and make sure that key makes contact. See Maintenance Section, paragraph 1.

D. SYMPTOM: Typing a SHIFT or CTRL character does not produce specified function.

CAUSE: Improper typing.

CURE: Make sure that SHIFT or CTRL key is held down while typing the second character.

CAUSE: Bad key contact.

CURE: Take off top of key and make sure that key makes contact.

E. SYMPTOM: Message retrieved from "message memory" is missing trailing characters.

CAUSE: Number of allowed characters exceeded.

CURE: Rearrange and reenter your message.

CAUSE: Second message overlaps first message.

CURE: Rearrange and reenter messages.

F. SYMPTOM: Transmitter fails to key.

CAUSE: Improper connections to your transmitter.

CURE: Check transmitter keying requirements and make sure it is connected to the AKB-1 per instructions in this manual.

G. SYMPTOM: Outputs wrong characters in Baudot or ASCII.

CAUSE: RTTY reference oscillator is off frequencies.

CURE: See Maintenance Section, paragraph 2 for adjustment information.

H. SYMPTOM: Occasionally sends double character for single keystroke

CAUSE: Dirty or misaligned spring switches under keys.

CURE: Check key spring switches and align so that there is minimal sideways motion of spring switch as key is pushed. Clean as per instruction in Maintenance Section, paragraph 1.

# MAINTENANCE

## 1. Key Switches

The key switches are gold plated, quadruply redundant spring contacts that will normally require no maintenance. However, if a contact seems to be a problem, clean it following this procedure. Use a small screw driver to gently pry up the key caps, exposing the spring contacts. Saturate a heavy piece of paper (1/8" x 2") with a good quality contact cleaner. Insert the paper between the contacts and push down the square column allowing the contacts to grip the paper. Work the paper up and down a few times while the contacts squeeze the paper. This will prevent dirt on the contacts from causing double characters or false outputs.

## 2. RTTY Reference Oscillator

Normally this control does not need adjustment but as a matter of periodic maintenance the frequency can be checked. You will note on the top p.c. board that has the key switch assembly mounted to it, three 555 timer chips near the upper left. The one closest to the 20 turn pot has a small p.c. pad just below pins 5 and 6. This is the test point to which you touch your frequency counter probe. Adjust the 20 turn pot for a 2000 Hz readout.

## RTTY AFSK MODULATOR

The Microlog Corporation AFSK Modulator is a device which converts digital input signals to a sine wave output. This unit generates audio frequencies of 2125 Hz for a 'Mark' and a frequency of 2295 Hz for a 'Space'. This sine wave output is at a level to be directly compatible with the microphone input level of your SSB transmitter. If you want the 'Mark' frequency to be high output frequency, as is customarily done on the low bands, set your SSB transmitter to LSB mode. For the 'Mark' frequency to be the lower transmitted frequency, you should set your transmitter to USB mode (this is customarily done in the VHF bands). The actual frequency of your transmitted carrier is 2125 Hz above or below the frequency indicated on your transmitter dial.

### Internally Wired Unit (Inside keyboard)

A phone jack is provided on the rear of the AKB-1 keyboard for audio output. Connect this to the microphone input on your transmitter. No additional controls are needed since internal wiring connects all power and logic.

### External (Remote) Box

There are no controls on this unit. It does not hurt the unit to be left on (plugged in) as the unit draws only milliwatts of power. With the cord supplied you should connect the shield end of this cord to the ground terminal on the AKB-1. The center conductor of this input cord should be connected to

the ⊕ terminal. The unit has protective circuitry that enables the unit to be connected to this ⊕ terminal even if your transmitter is also connected to it at the same time. This cord supplied should be wired to a jack or plug that is compatible, and will mate with the microphone input connection on your transmitter. This cord is plugged into the "output" jack on the modulator.

To use the unit, key your transmitter and adjust the microphone gain control on your transmitter to obtain the proper RF drive for your transmitter. As the keyboard generates the codes, the modulator will generate the AFSK output to your microphone input.

Description and Operation

The modulator is factory adjusted for 170 Hz shift, with mark (key closed) at 2125 Hz and space (key open) at 2295. These are the standard shift and frequencies in use on the amateur HF and VHF bands. The modulator can be adjusted for other shifts if required. See section on calibration. The AF level (output) is about 40-50 mv which is compatible with most transmitter microphone inputs. The output connector is a 3 circuit (stereo headphone type) phone jack with audio on the tip, PTT on the ring and ground on the sleeve. The switch will key the transmitter push to talk line, as well as turn on the modulator. In other words, the audio output can be left connected to the mike or an aux. input to the transmitter and will be shut off when the switch on the rear of the keyboard is down (off).

## Calibrating the AFSK Modulator

Procedure:

1. Set Signal generator for 2295 Hz as read on frequency counter.

2. With AKB-1 in Space condition, no tone head in speaker, adjust top pot for a lissajous pattern of a circle on the scope.

3. Set signal generator for 2125 Hz.

4. Push "Shift T" to get the AKB-1 into the mark condition.

5. Adjust bottom pot for circle.

6. Note. For other than 170 Hz shift, use the following frequencies:

| Shift | Mark | Space |
|---|---|---|
| 170 Hz | 2125 Hz | 2295 Hz |
| 425 Hz | 2125 Hz | 2550 Hz |
| 850 Hz | 2125 Hz | 2975 Hz |

# AFSK MODULATOR CALIBRATION

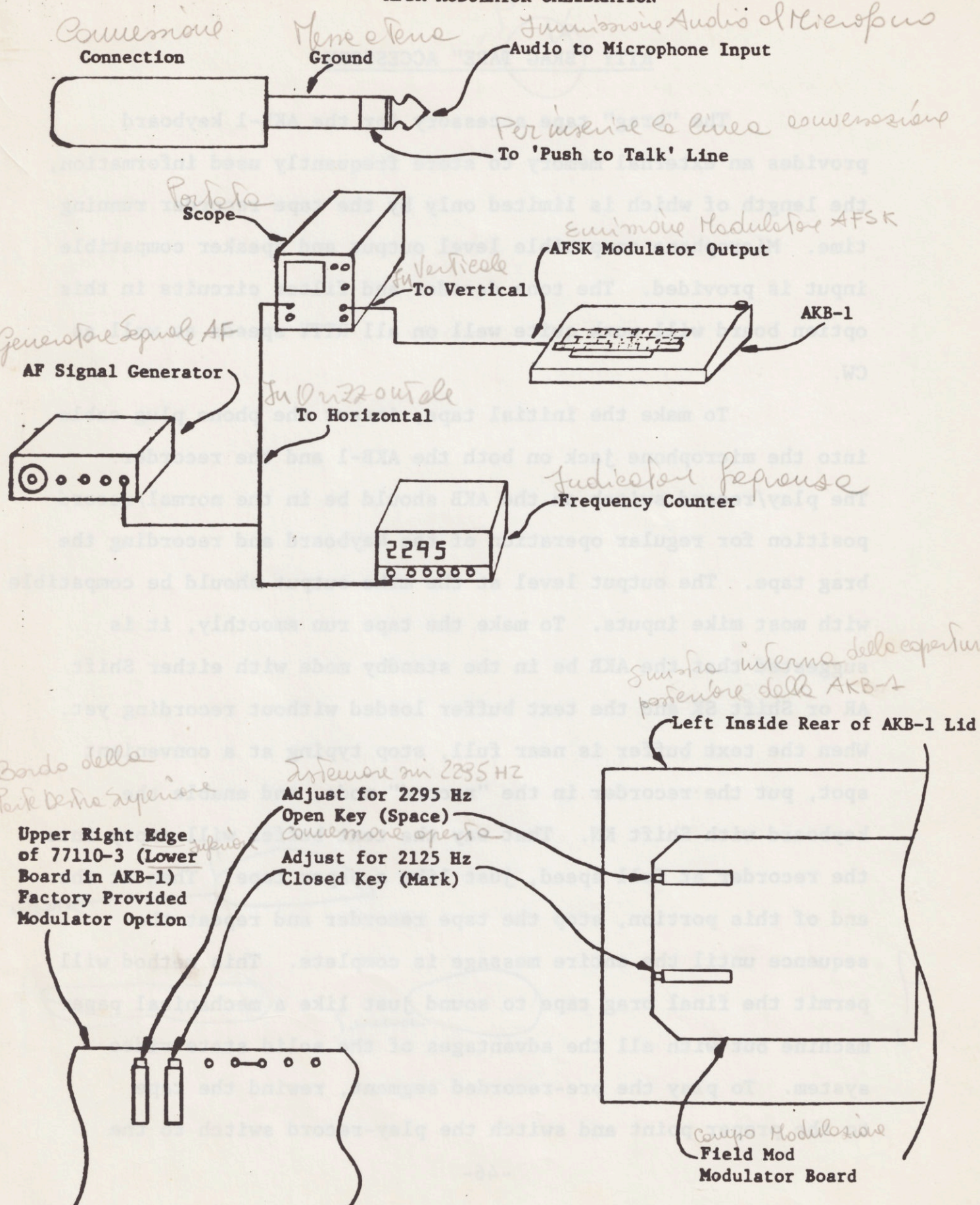

## RTTY "BRAG TAPE" ACCESSORY

The "brag" tape accessory for the AKB-1 keyboard provides an external memory to store frequently used information, the length of which is limited only by the tape recorder running time. Microphone compatible level output and speaker compatible input is provided. The tone decoder and filter circuits in this option board will work quite well on all RTTY speeds as well as CW.

To make the initial tape, insert the phono plug cable into the microphone jack on both the AKB-1 and the recorder. The play/record switch on the AKB should be in the normal/record position for regular operation of the keyboard and recording the brag tape. The output level at the mike output should be compatible with most mike inputs. To make the tape run smoothly, it is suggested that the AKB be in the standby mode with either Shift AR or Shift SK and the text buffer loaded without recording yet. When the text buffer is near full, stop typing at a convenient spot, put the recorder in the "record" mode, and enable the keyboard with Shift KN. That way the text buffer will empty into the recorder at full speed, just like a paper tape. Then at the end of this portion, stop the tape recorder and repeat the sequence until the entire message is complete. This method will permit the final brag tape to sound just like a mechanical paper machine but with all the advantages of the solid state video system. To play the pre-recorded segment, rewind the tape to the proper point and switch the play-record switch to the

"play" position. Set the recorder in the play mode and adjust the audio volume control for a comfortable level. The rest of the AKB outputs function just as they did so that the "brag" tape can be inserted in the transmission at any time simply by placing the play-record switch in the play position and returning to the normal/record position after the tape is finished.

# APPENDIX A

## SUGGESTED CIRCUIT FOR INVERTED RTTY OUTPUT FROM THE AKB-1 KEYBOARD

If your transmitter has an FSK input, you can connect it directly to the AKB-1 output (plus and ground assuming positive voltage of FSK jack) for RTTY. The AKB-1 supplies a closed contact for mark and an open contact for space. If you would like to invert this logic, or, if your transmitter requires the opposite signal (open for mark, closed for space) a simple inverter circuit can be used to perform this task.

An acceptable circuit that can be built into the AKB is shown below.

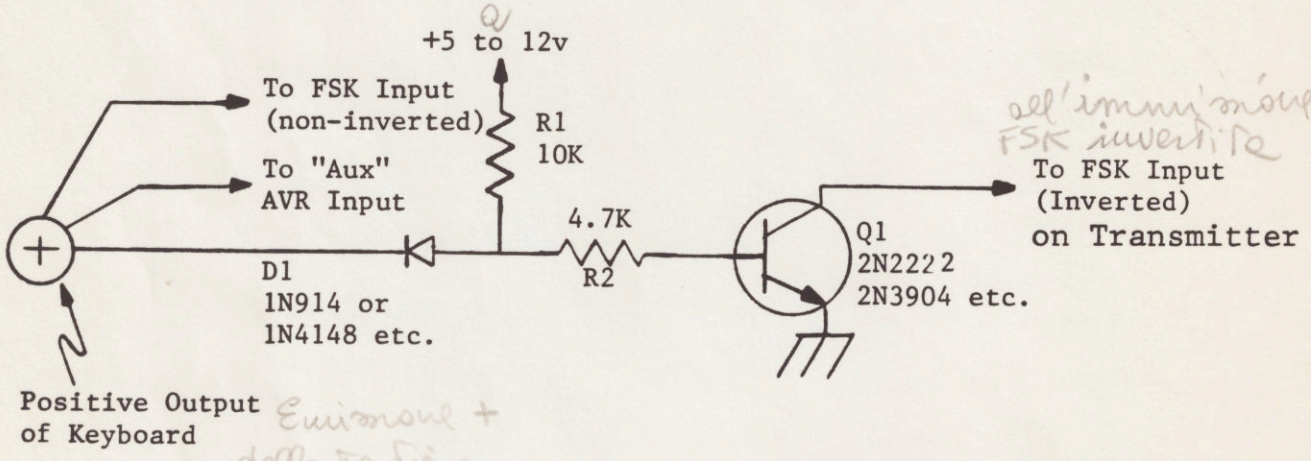


This circuit can be built into either your transmitter (recommended) or the keyboard. It will require a separate output jack for the inverted signal because the AVR must still see the non-inverted, or normal signal to print what is being transmitted.

The parts are not critical; almost any NPN transistor can be used if it can handle the voltage and current requirements. Layout is also not critical; the parts can be assembled on a terminal strip or vector board or possibly soldered directly to the connector inside the transmitter. A parts kit is available from MICROLOG for $3.00 which includes a terminal strip and phono jack. Suggested parts layout is shown below.

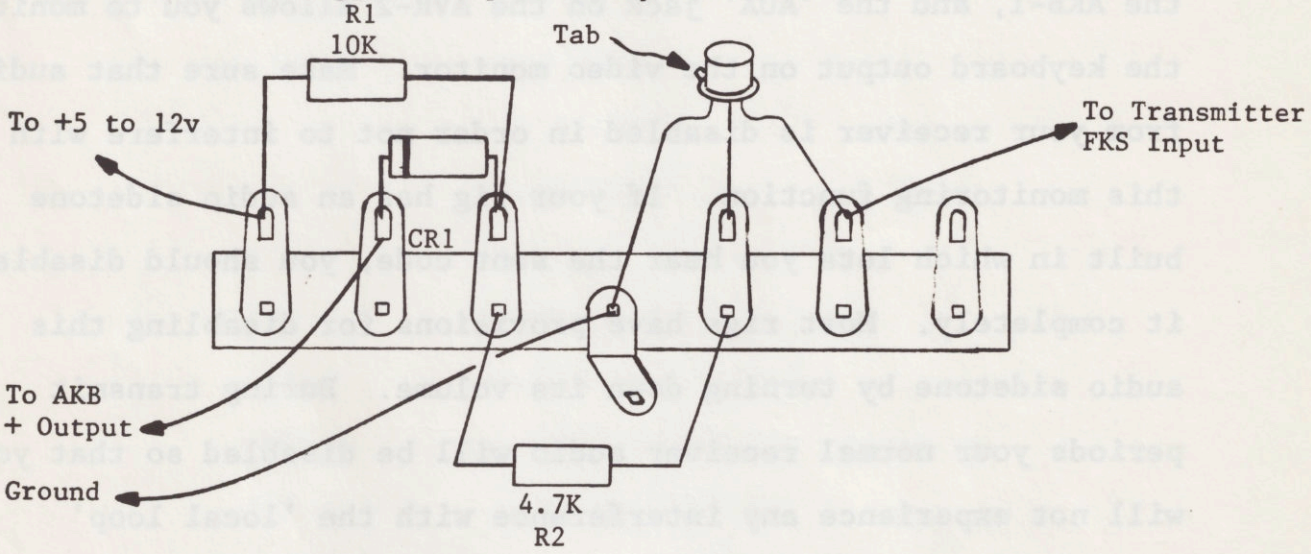


NOTE: The optional keying relay can be used to accomplish this "invert" function by simply moving the wire going to the normally open terminal to the normally closed terminal and using the relay output to key your FSK line. The output will then be "inverted", that is closed on space, open on mark.

## SYSTEM INTERCONNECTIONS

The MICROLOG System has provisions for direct interfaces with your amateur rig without the need of any additional equipment. For details of AKB-1 and AVR-2 rear panel connections see the respective instruction manual.

A 'local loop' connection between the 'AUX' jack on the AKB-1, and the 'AUX' jack on the AVR-2 allows you to monitor the keyboard output on the video monitor. Make sure that audio from your receiver is disabled in order not to interfere with this monitoring function. If your rig has an audio sidetone built in which lets you hear the sent code, you should disable it completely. Most rigs have provisions for disabling this audio sidetone by turning down its volume. During transmit periods your normal receiver audio will be disabled so that you will not experience any interference with the 'local loop' between the AKB-1 and AVR-2. If your receiver audio is on, turn down the volume when you want to monitor your keyboard output on the TV screen.

If your system is equipped with the 'Split Screen' option, an extra 5 wire cable is provided by interconnecting the AKB-1 and AVR-2. This option is enabled by typing CTRL SPACEBAR on the keyboard as explained in the AKB-1 instruction manual.

connessioni per RTTY e CW minimo richiesto

MINIMUM REQUIRED CONNECTIONS FOR RTTY AND CW

RG 58C/U RECOMMENDED FOR ALL CONNECTIONS EXCEPT AFSK MODULATION

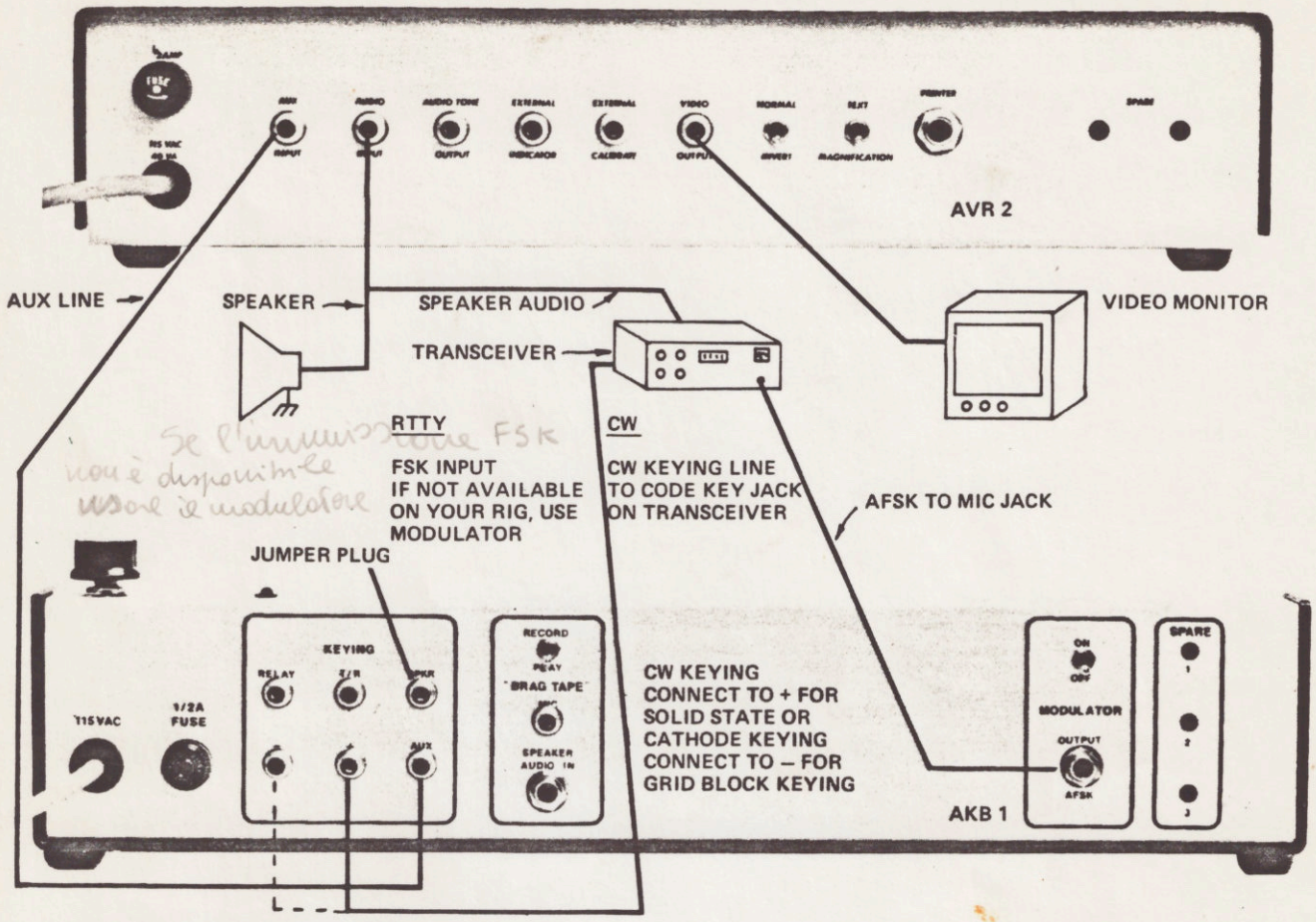


OPTIONAL WIRING CONNECTIONS

GOOD QUALITY SHIELDED LINES RECOMMENDED FOR ALL CONNECTIONS

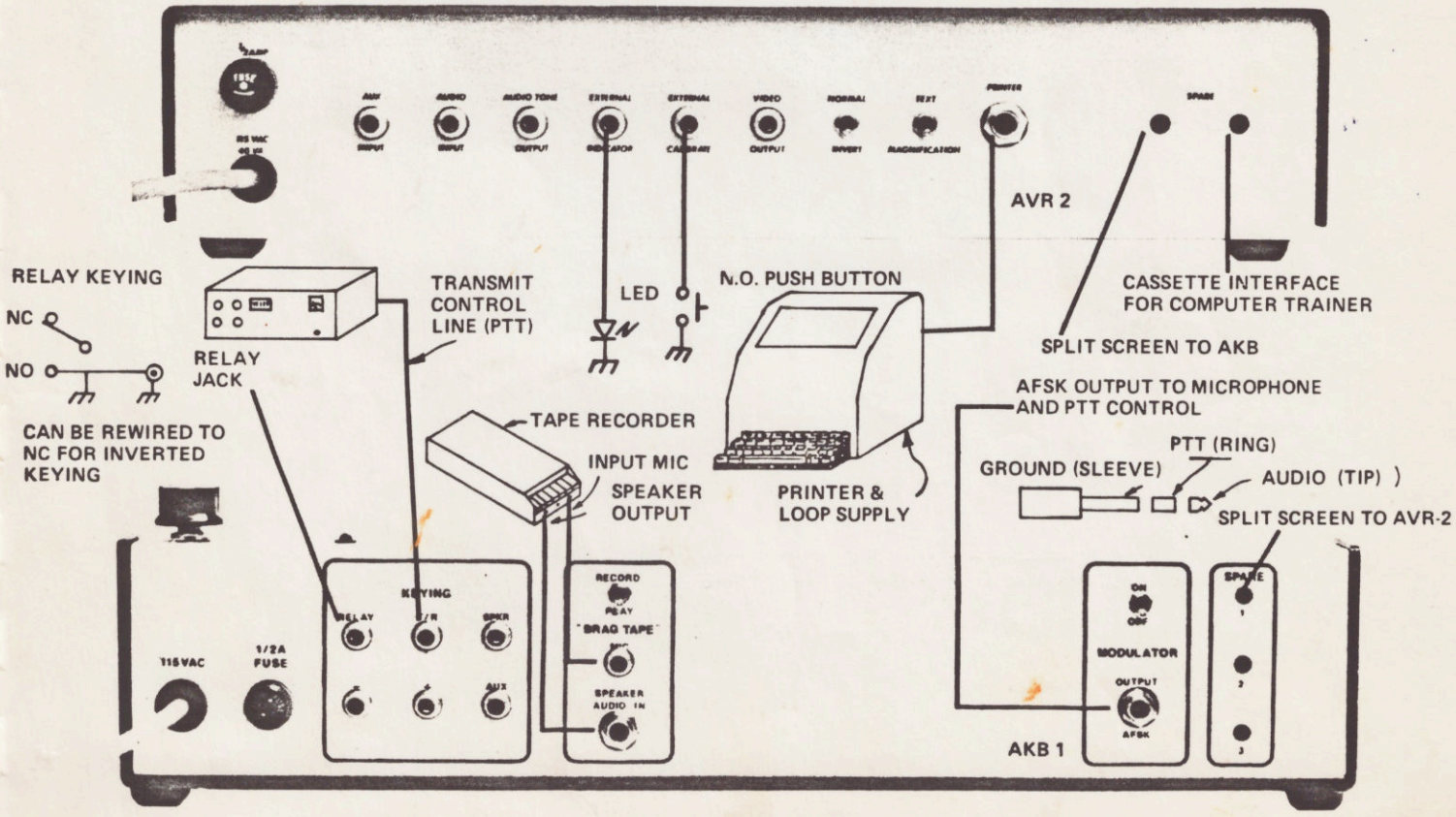

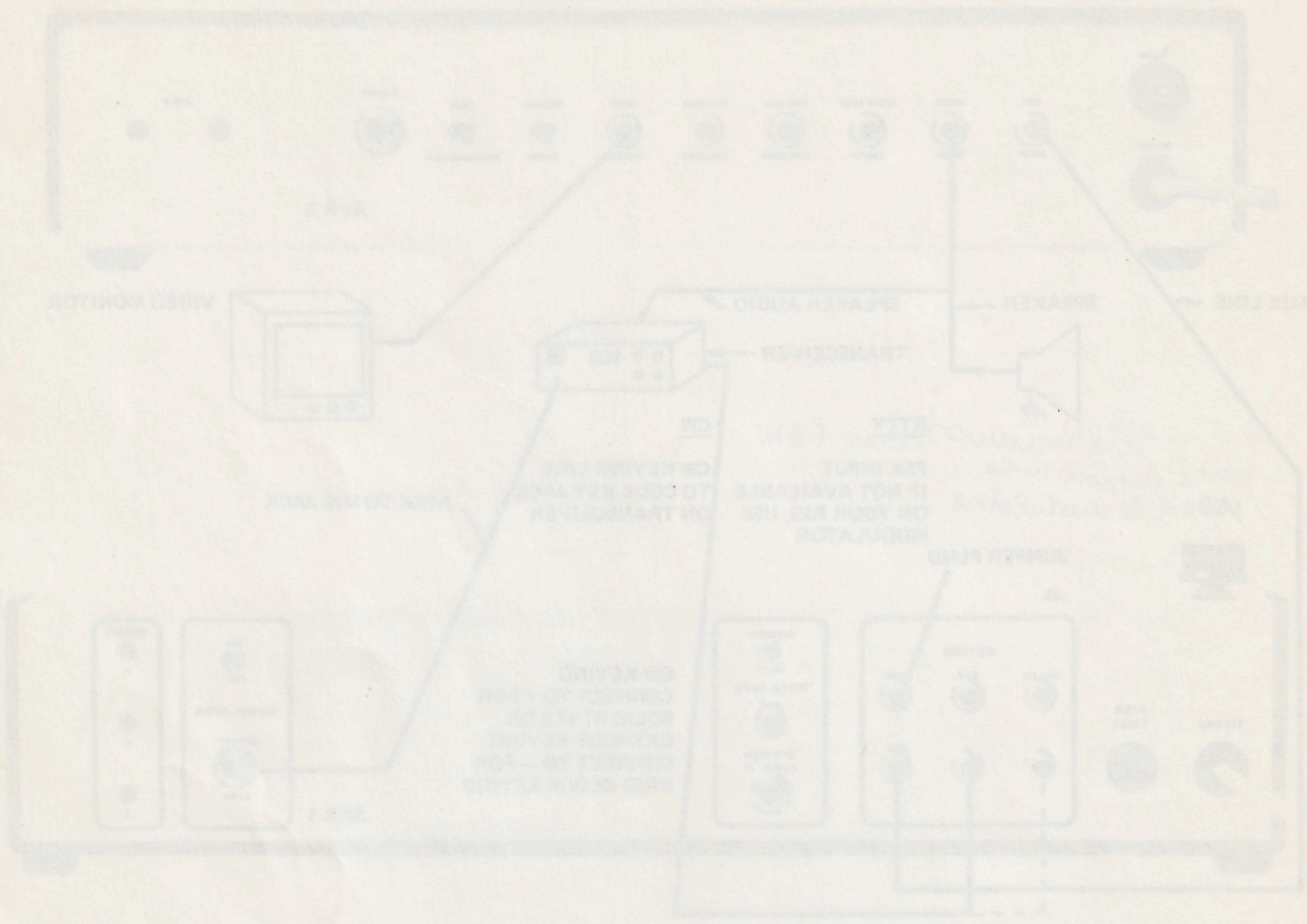

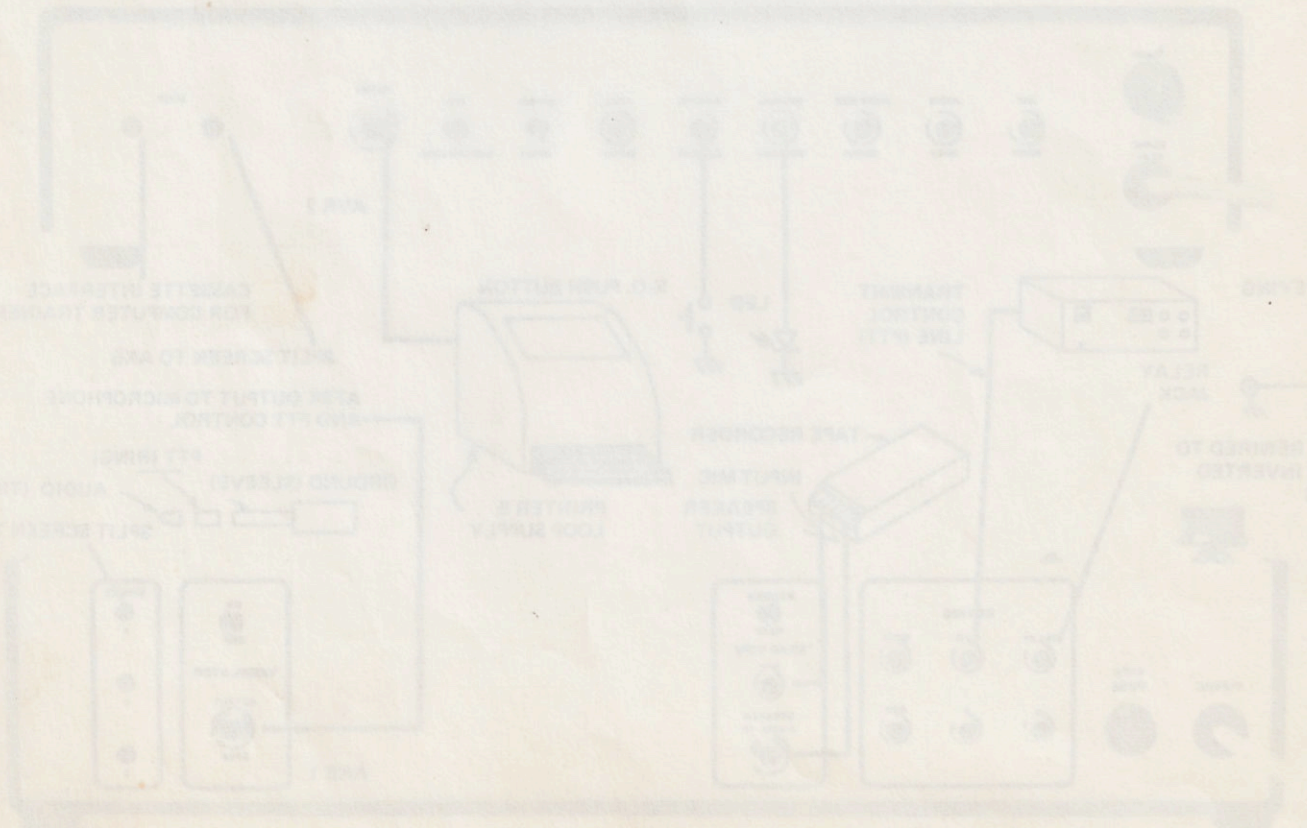

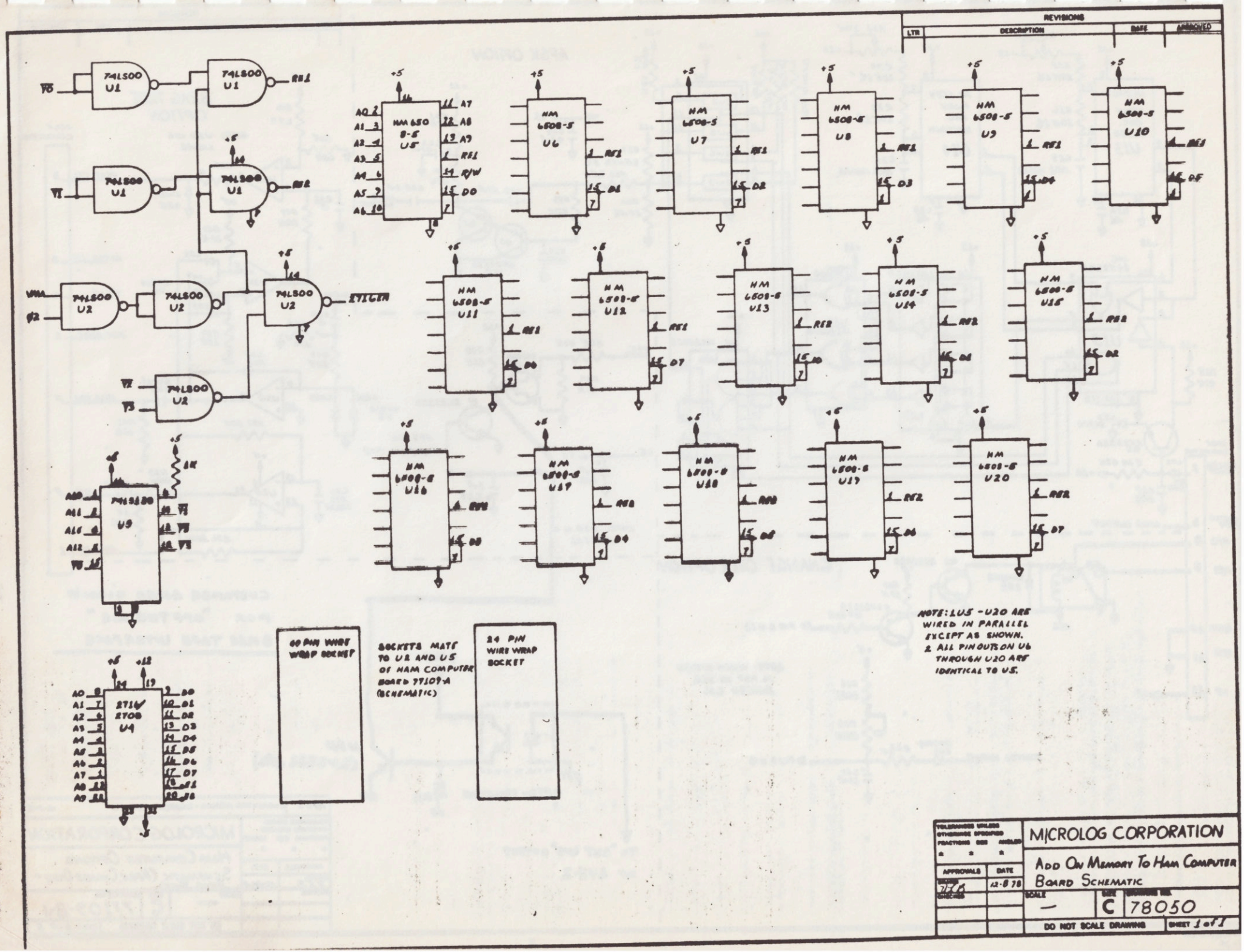
REVISIONS
LTR
DESCRIPTION
DATE
APPROVED
74LS00 U1
74LS00 U2
HM 6508-5 U5
HM 6508-5 U6
HM 6508-5 U7
HM 6508-5 U8
HM 6508-5 U9
HM 6508-5 U10
HM 6508-5 U11
HM 6508-5 U12
HM 6508-5 U13
HM 6508-5 U14
HM 6508-5 U15
HM 6508-5 U16
HM 6508-5 U17
HM 6508-5 U18
HM 6508-5 U19
HM 6508-5 U20
74LS130 U9
2716/2708 U4
40 PIN WIRE WRAP SOCKET
SOCKETS MATE TO U2 AND U5 OF HAM COMPUTER BOARD 77109-A (SCHEMATIC)
24 PIN WIRE WRAP SOCKET
NOTE: 1 U5 - U20 ARE WIRED IN PARALLEL EXCEPT AS SHOWN.
2 ALL PIN OUTS ON U6 THROUGH U20 ARE IDENTICAL TO U5.
MICROLOG CORPORATION
ADD ON MEMORY TO HAM COMPUTER BOARD SCHEMATIC
APPROVALS
DATE
12-8-78
SCALE
—
SIZE
C
78050
DO NOT SCALE DRAWING
SHEET 1 of 1

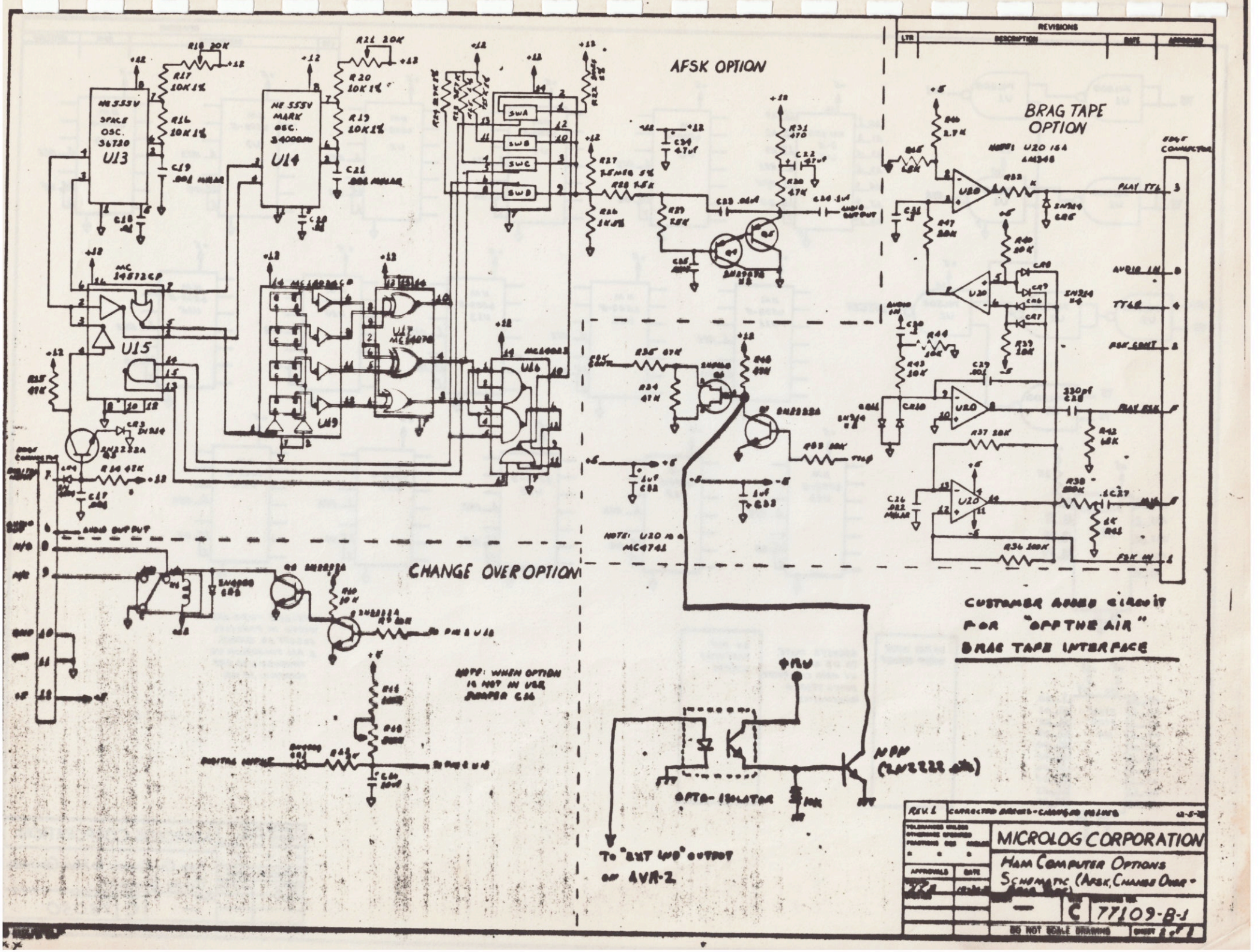
AFSK OPTION
BRAG TAPE OPTION
CHANGE OVER OPTION
CUSTOMER ADDED CIRCUIT FOR "OFF THE AIR" BRAG TAPE INTERFACE
NOTE: WHEN OPTION IS NOT IN USE, JUMPER C46
NOTE: U20 IS A MC4741
NPN (2N2222 etc)
OPTO-ISOLATOR
To "EXT KYB" OUTPUT on 4VR-2
REVISIONS
MICROLOG CORPORATION
HAM COMPUTER OPTIONS SCHEMATIC (AFSK, CHANGE OVER-
77109-B-1
DO NOT SCALE DRAWING

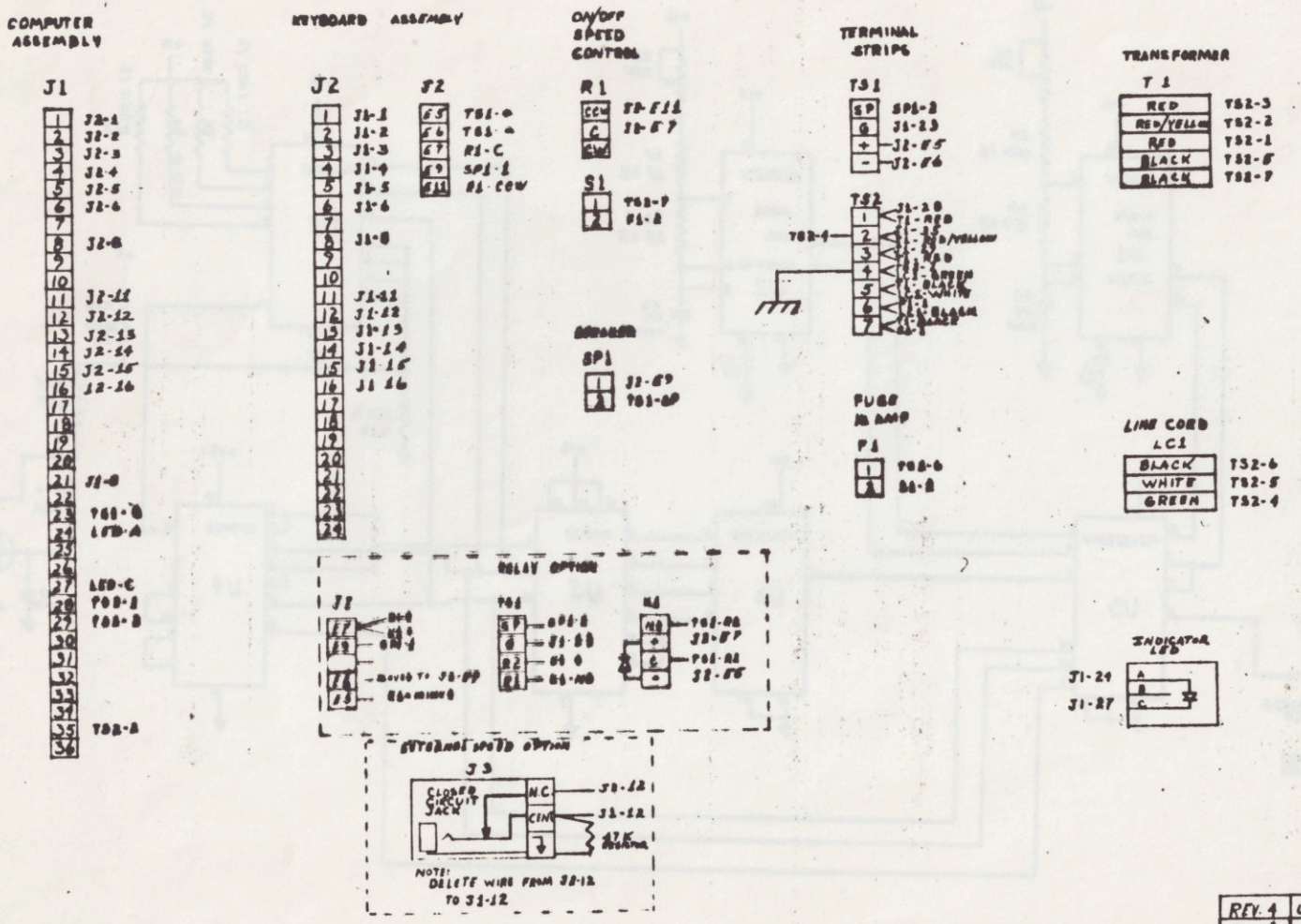


MICROLOG RESERVES THE RIGHT TO CHANGE CIRCUITRY WITHOUT NOTICE.

| REVISIONS | | | |
|---|---|---|---|
| LTR | DESCRIPTION | DATE | APPROVED |
| REV. 4 | UPDATED DRAWING | 5-25-78 | |
| REV. 3 | ADDED EXTERNAL SPEED OPTION | 2/4/78 | |
| REV. 2 | ADDED RELAY OPTION | | |
| REV. 1 | added LED | | |

| APPROVALS | DATE |
|---|---|
| DRAWN | 8/5/77 |
| CHECKED | 8/8/77 |

MICROLOG CORPORATION

HAM KEYBOARD WIRING DIAGRAM

SCALE | SIZE C | DRAWING NO. 77115-4

DO NOT SCALE DRAWING | SHEET 1 of 1

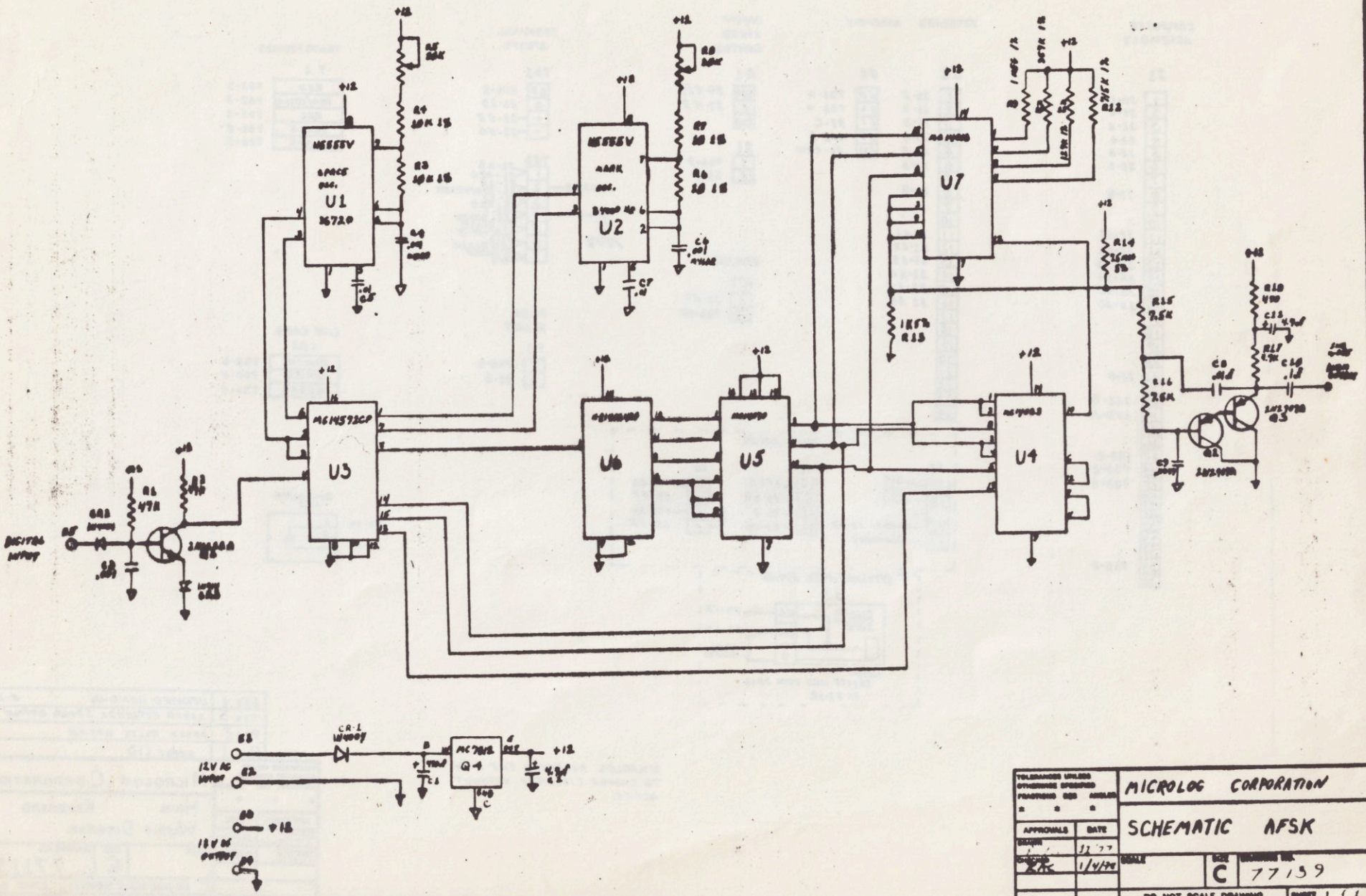


| LTR | DESCRIPTION | DATE | APPROVED |
|---|---|---|---|
| | | | |

TOLERANCES UNLESS OTHERWISE SPECIFIED
FRACTIONS DEG ANGLES

| APPROVALS | DATE |
|---|---|
| DRAWN | 12/77 |
| CHECKED | 1/4/78 |

MICROLOG CORPORATION

SCHEMATIC AFSK

SIZE C

DRAWING NO. 77139

DO NOT SCALE DRAWING

SHEET 1 of 1

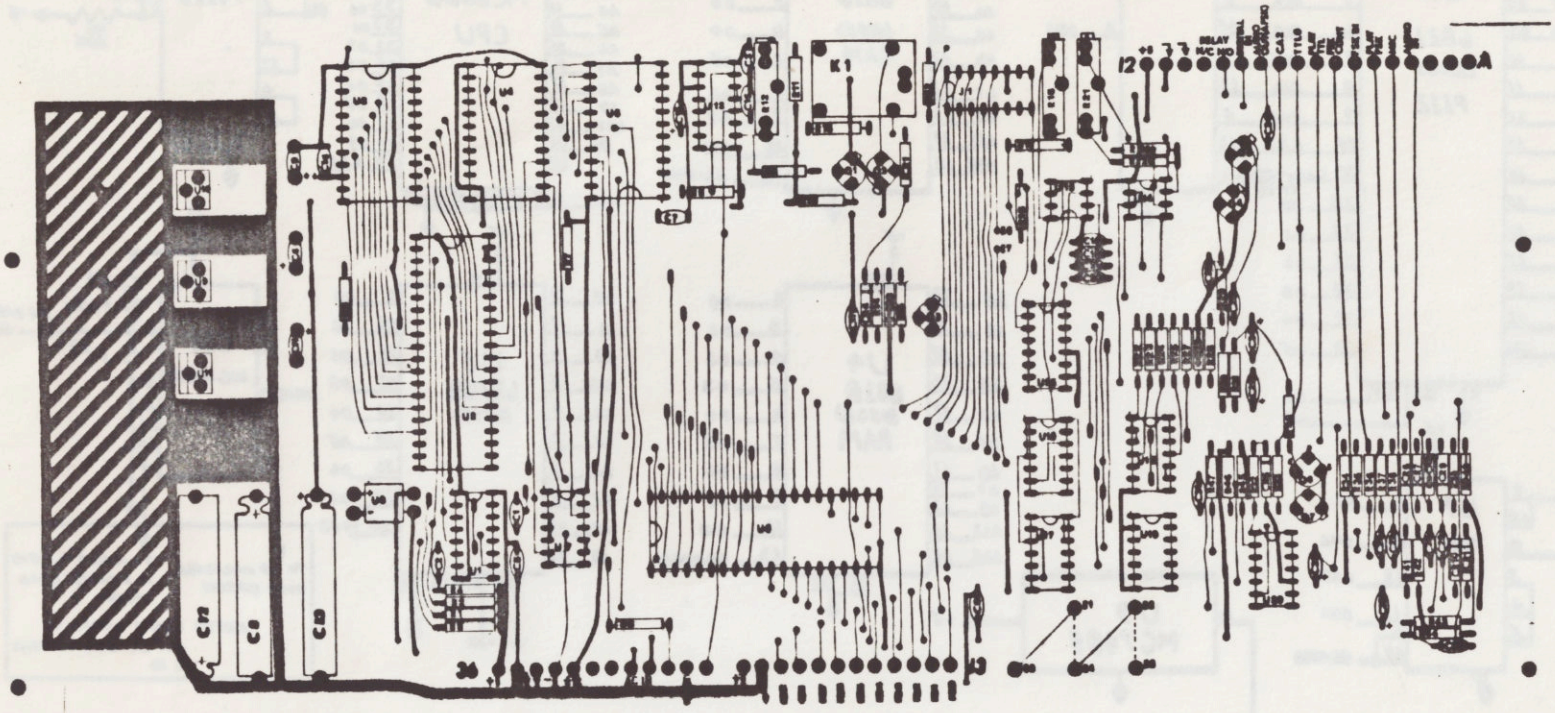


| REVISIONS | | | |
|---|---|---|---|
| LTR | DESCRIPTION | DATE | APPROVED |

| | | |
|---|---|---|
| REV 3 | ADDED OPTIONS U13-U20, R7-R40, C17-C34, C81-C83, Q1-Q7, R6-R7 | 11-8-78 |
| REV 2 | ADDED 16 PIN CONNECTOR AND 5 JUMPER | 3-16-78 |
| REV 1 | | 10-1-77 |

TOLERANCES UNLESS OTHERWISE SPECIFIED
FRACTIONS ± DEC ± ANGLES ±

| APPROVALS | DATE |
|---|---|
| | 6-6-77 |

MICROLOG CORPORATION

HAM COMPUTER AND OPTIONS
ASSEMBLY DRAWING

SCALE 2/1 | SIZE D | DRAWING NO 77110-A-3

DO NOT SCALE DRAWING | SHEET 1 of 2

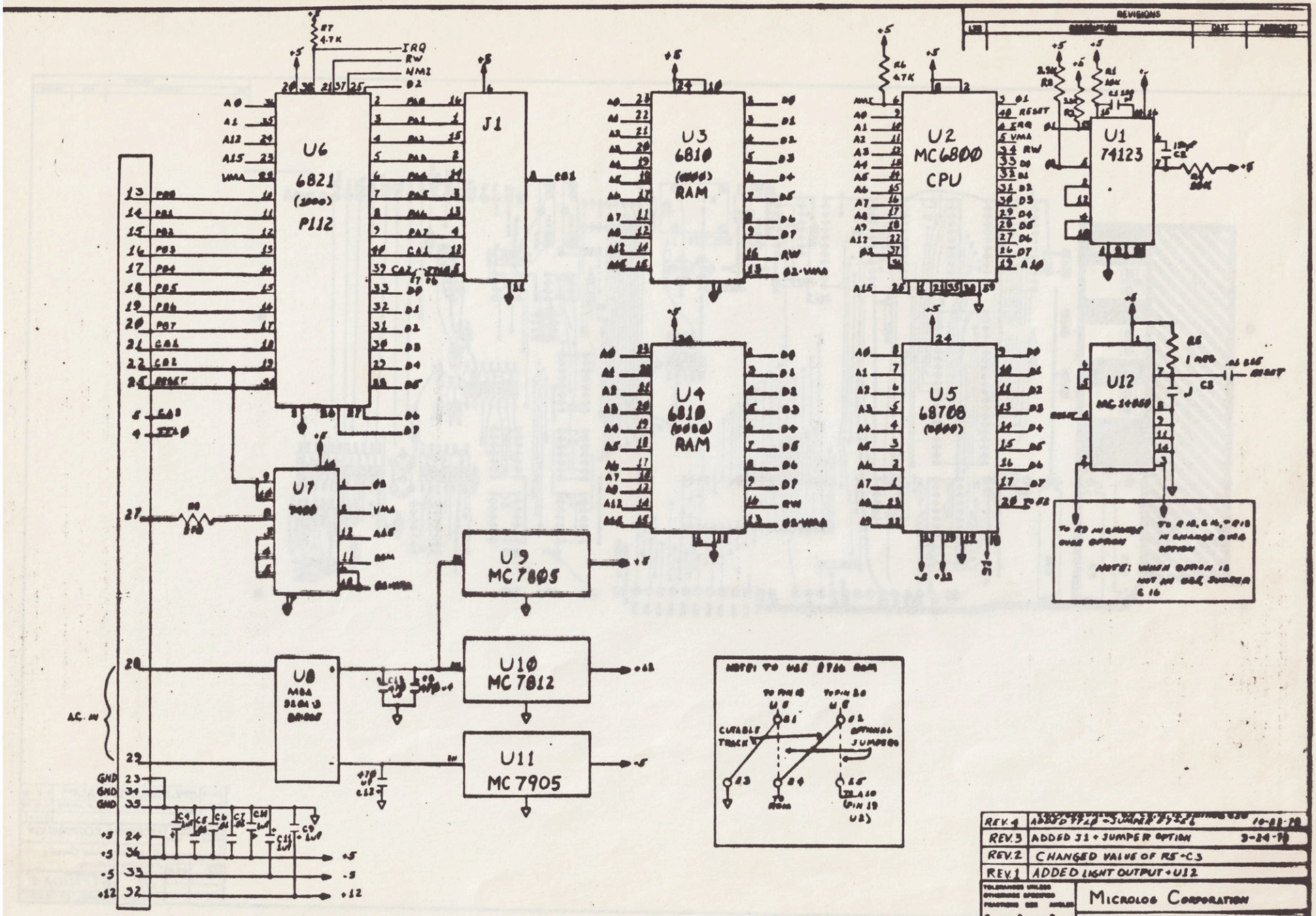


| REVISIONS | | | |
|---|---|---|---|
| LTR | DESCRIPTION | DATE | APPROVED |

| | | |
|---|---|---|
| REV.4 | ADDED 77L0 + JUMPER 57+56 | 10-22-78 |
| REV.3 | ADDED J1 + JUMPER OPTION | 3-24-78 |
| REV.2 | CHANGED VALUE OF R5+C3 | |
| REV.1 | ADDED LIGHT OUTPUT + U12 | |

TOLERANCES UNLESS OTHERWISE SPECIFIED
FRACTIONS ± DEC ± ANGLES ±

MICROLOG CORPORATION

HAM COMPUTER SCHEMATIC

| APPROVALS | DATE |
|---|---|
| DRAWN VLC | 6-1-77 |
| CHECKED | |

SCALE —

SIZE C

DRAWING NO. 77109-A-4

DO NOT SCALE DRAWING

SHEET 1 of 2

MICROLOG RESERVES THE RIGHT TO CHANGE CIRCUITRY WITHOUT NOTICE.

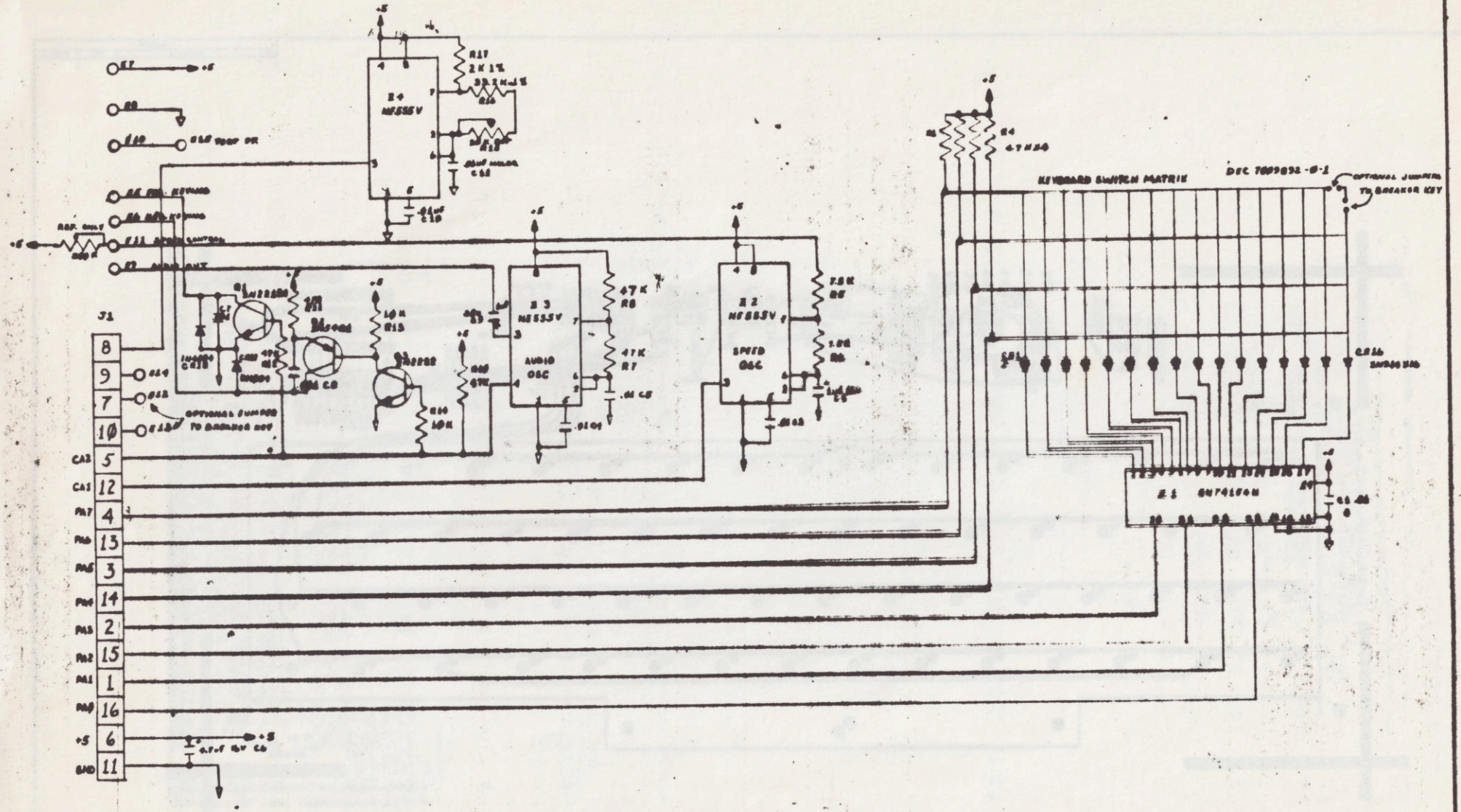
REVISIONS
LTR
DESCRIPTION
DATE
APPROVED
KEYBOARD SWITCH MATRIX
DEC 7009032-0-1
OPTIONAL JUMPER TO BREAKER KEY
OPTIONAL JUMPER TO BREAKER KEY
AUDIO OSC
SPEED OSC
J1
8
9
7
10
5
12
4
13
3
14
2
15
1
16
6
11
+5
GND
CA2
CA1
PA7
PA6
PA5
PA4
PA3
PA2
PA1
PA0
R17 2K 1%
33.2K 1%
47K R8
47K R7
10K R13
10K R14
7.5K R5
1.0K R6
.01 C5
.01 C6
.01 C7
.01 C8
.01 C9
.01 C10
.01 C11
.01 C12
.01 C13
.01 C14
.01 C15
.01 C16
.01 C17
.01 C18
.01 C19
.01 C20
.01 C21
.01 C22
.01 C23
.01 C24
.01

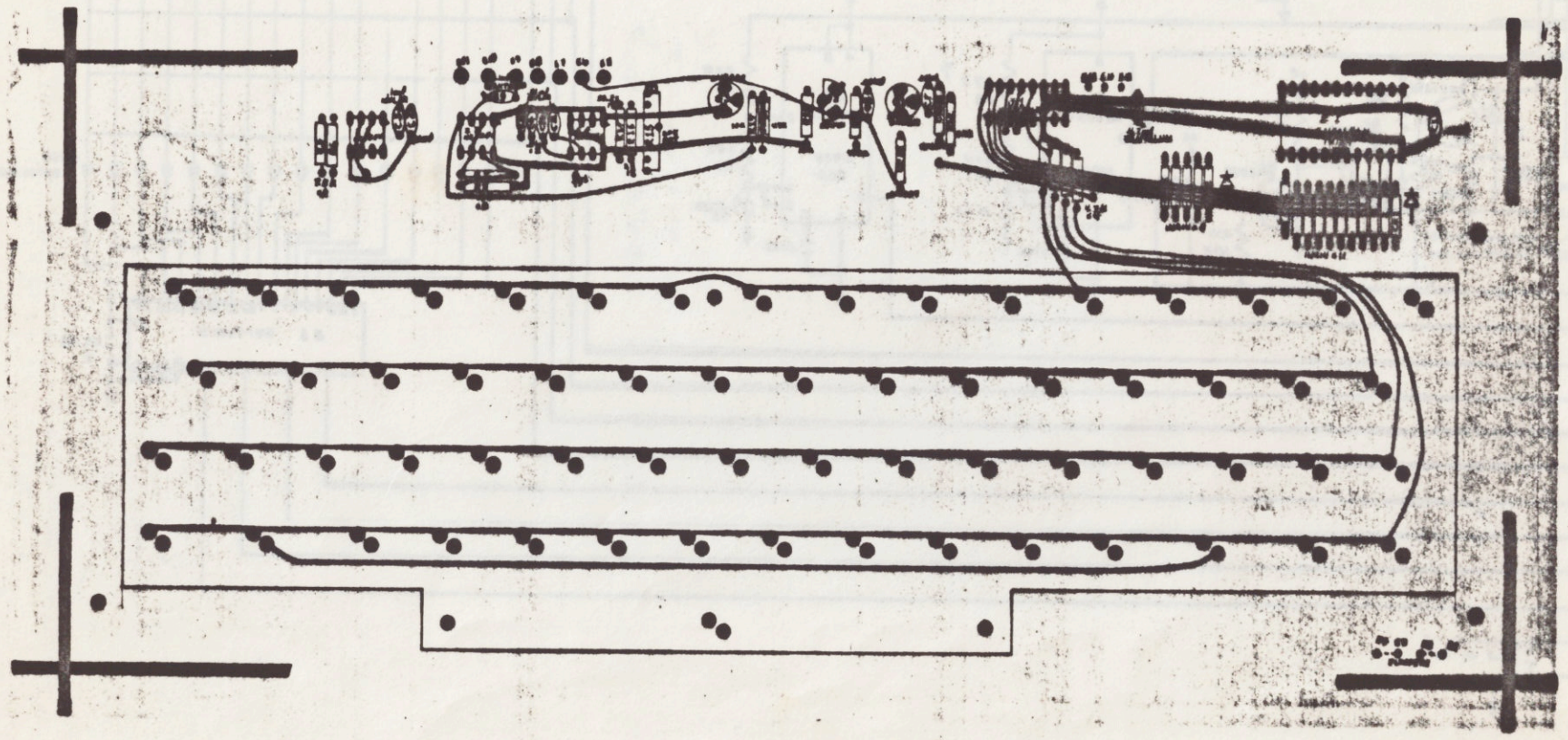

| | |
|---|---|
| Intern. Corp | |
| Universal Keyboard Assembly Drawing | |
| SIZE D | DRAWING NO. 78006-A |
| DO NOT SCALE DRAWING | SHEET 1 of 2 |

## WARRANTY

The MICROLOG CORPORATION CW KEYBOARD, Model AKB-1, is covered by a One (1) Year Warranty against defects in materials and workmanship.

Further questions or requests for assistance may be addressed to Customer Service

MICROLOG CORPORATION
4 Professional Drive, Suite 119
Gaithersburg, Maryland 20760

301-948-5307